MIAMI-DADE COUNTY
PRODUCT CONTROL SECTION
11805 SW 26 Street, Room 208
Miami, Florida 33175-2474
T (786) 315-2590 F (786) 315-2599
www.miamidade.gov/economy

DEPARTMENT OF REGULATORY AND ECONOMIC RESOURCES (RER)
BOARD AND CODE ADMINISTRATION DIVISION

NOTICE OF ACCEPTANCE (NOA)

Custom Window System, Inc.
1900 SW 44th Ave.,
Ocala, FL 34474

SCOPE:

This NOA is being issued under the applicable rules and regulations governing the use of construction materials. The documentation submitted has been reviewed and accepted by Miami-Dade County RER Product Control Section to be used in Miami Dade County and other areas where allowed by the Authority Having Jurisdiction (AHJ).

This NOA shall not be valid after the expiration date stated below. The Miami-Dade County Product Control Section (In Miami Dade County) and/or the AHJ (in areas other than Miami Dade County) reserve the right to have this product or material tested for quality assurance purposes. If this product or material fails to perform in the accepted manner, the manufacturer will incur the expense of such testing and the AHJ may immediately revoke, modify, or suspend the use of such product or material within their jurisdiction. RER reserves the right to revoke this acceptance, if it is determined by Miami-Dade County Product Control Section that this product or material fails to meet the requirements of the applicable building code.

This product is approved as described herein and has been designed to comply with the Florida Building Code, including the High Velocity Hurricane Zone.

DESCRIPTION: Series "7900" Aluminum Sliding Glass Door (Steel Reinforced) – L.M.I.

APPROVAL DOCUMENT: Drawing No. **CWS-1223,** titled "7900 Aluminum Sliding Door-Impact", sheets 1 through 14 of 14, dated DEC 18, 2023, prepared by manufacturer, signed and sealed by Thomas J. Sotos, P.E., bearing the Miami-Dade County Product Control Revision stamp with the Notice of Acceptance number and expiration date by the Miami-Dade County Product Control Section.

MISSILE IMPACT RATING: Large and Small Missile Impact Resistant

Limitations:

1. See Design Pressure (DP) VS door size, glass type, reinforcements, sill type and configuration in sheet **2**, sheet **5**, and sheet **8**.
2. See pocket installation detail in sheet **11** and notes #15 and #16 in sheet **1**.
3. Applicable Egress requirements to be reviewed by AHJ.

LABELING: Each unit shall bear a permanent label with the manufacturer's name or logo, city, state and series and following statement: "Miami-Dade County Product Control Approved", unless otherwise noted herein.

RENEWAL of this NOA shall be considered after a renewal application has been filed and there has been no change in the applicable building code negatively affecting the performance of this product.

TERMINATION of this NOA will occur after the expiration date or if there has been a revision or change in the materials, use, and/or manufacture of the product or process. Misuse of this NOA as an endorsement of any product, for sales, advertising or any other purposes shall automatically terminate this NOA. Failure to comply with any section of this NOA shall be cause for termination and removal of NOA.

ADVERTISEMENT: The NOA number preceded by the words Miami-Dade County, Florida, and followed by the expiration date may be displayed in advertising literature. If any portion of the NOA is displayed, then it shall be done in its entirety.

INSPECTION: A copy of this entire NOA shall be provided to the user by the manufacturer or its distributors and shall be available for inspection at the job site at the request of the Building Official.

The submitted documentation was reviewed by Ishaq I. Chanda, P.E. Ishaq I. Chanda

Custom Window System, Inc.

NOTICE OF ACCEPTANCE: EVIDENCE SUBMITTED

1. EVIDENCE SUBMITTED UNDER PREVIOUS NOA's

A. DRAWINGS

1. Manufacturer's die drawings and sections.
(Submitted under NOA No. 12-1204.12)

2. Drawing No. **L9200-1201,** titled "Series SGD-9200 Aluminum Sliding Glass Door (L.M.I.)", sheets 1 through 14 of 14, dated 09/25/12, with revision **D** dated 12/03/20, prepared by manufacturer, signed and sealed by Thomas J. Sotos, P.E.
(Submitted under NOA No. 23-0119.03)

B. TESTS

1. Test reports on: 1) Uniform Static Air Pressure Test, Loading per FBC TAS 202-94 along with marked-up drawings and installation diagram of an aluminum sliding glass door, prepared by Hurricane Engineering & Testing, Inc., Test Reports No. **HETI-11-3269** dated 05/16/11, **HETI-11-3292** dated 10/20/11, **HETI-11-3274** dated 10/20/11, **HETI-11-3329** dated 01/16/12, **HETI-12-4040** dated 10/12/12, **HETI-12-4051** dated 06/13/12, **HETI-12-4053** and **HETI-12-4064**, dated 09/24/12, all signed and sealed by Rafael E. Droz-Seda, P.E.
(Submitted under NOA No. 12-1204.12)

2. Test reports on: 1) Large Missile Impact Test per FBC, TAS 201-94
2) Cyclic Wind Pressure Loading per FBC, TAS 203-94
along with marked-up drawings and installation diagram of an aluminum sliding glass door, prepared by Hurricane Engineering & Testing, Inc., Test Reports No. **HETI-11-3270** dated 05/16/11, **HETI-11-3275** dated 10/20/11, **HETI-11-3307** dated 10/03/11, **HETI-11-3314** dated 10/20/11, **HETI-11-3330** dated 01/16/12, **HETI-12-4052** dated 07/10/12, **HETI-12-4054** and **HETI-12-4065**, dated 09/24/12, all signed and sealed by Rafael E. Droz–Seda, P.E.
(Submitted under NOA No. 12-1204.12)

3. Test reports on: 1) Uniform Static Air Pressure Test, Loading per FBC TAS 202-94
2) Large Missile Impact Test per FBC, TAS 201-94
3) Cyclic Wind Pressure Loading per FBC, TAS 203-94
along with marked-up drawings and installation diagram of an aluminum sliding glass door, prepared by Hurricane Engineering & Testing, Inc., Test Report No. **HETI-12-4041** dated 10/12/12, signed and sealed by Rafael E. Droz-Seda, P.E.
(Submitted under NOA No. 12-1204.12)

Ishaq I. Chanda

Ishaq I. Chanda, P.E.
Product Control Unit Supervisor
NOA No. 24-0116.13
Expiration Date: February 13, 2028
Approval Date: February 01, 2024

NOTICE OF ACCEPTANCE: EVIDENCE SUBMITTED

1. EVIDENCE SUBMITTED UNDER PREVIOUS NOA's (CONTINUED)

B. TESTS (CONTINUED)

4. Test reports on: 1) Air Infiltration Test per FBC, TAS 202-94
2) Uniform Static Air Pressure Test, Loading per FBC TAS 202-94
3) Water Resistance Test per FBC, TAS 202-94

along with marked-up drawings and installation diagram of an aluminum sliding glass door, prepared by Hurricane Engineering & Testing, Inc., Test Reports No. **HETI-11-3291** dated 07/15/11 and **HETI-11-3292** dated 10/20/11, both signed and sealed by Rafael E. Droz-Seda, P.E.
(Submitted under NOA No. 12-1204.12)

5. Test reports on: 1) Air Infiltration Test, per FBC, TAS 202-94
2) Uniform Static Air Pressure Test, Loading per FBC, TAS 202-94
3) Water Resistance Test, per FBC, TAS 202-94
4) Large Missile Impact Test per FBC, TAS 201-94
5) Cyclic Wind Pressure Loading per FBC, TAS 203-94
6) Forced Entry Test, Type "C" sliding door, Grade 10, per FBC 2411.3.2.1, and TAS 202-94

along with marked-up drawings and installation diagram of an aluminum sliding glass door, prepared by Hurricane Engineering & Testing, Inc., Test Report No. **HETI-11-3313**, dated 10/20/11, signed and sealed by Rafael E. Droz-Seda, P.E.
(Submitted under NOA No. 12-1204.12)

6. Test reports on: 1) Air Infiltration Test, per FBC, TAS 202-94
2) Uniform Static Air Pressure Test, Loading per FBC, TAS 202-94
3) Water Resistance Test, per FBC, TAS 202-94
4) Large Missile Impact Test per FBC, TAS 201-94
5) Cyclic Wind Pressure Loading per FBC, TAS 203-94
6) Forced Entry Test, Type "C" sliding door, Grade 10, per FBC 2411.3.2.1, and TAS 202-94

along with marked-up drawings and installation diagram of an aluminum sliding glass door, prepared by Fenestration Testing Laboratory, Inc., Test Reports No. **FTL-3078** dated 01/10/02, signed and sealed by Luis Figueredo, P.E.; **FTL-3525** and **FTL-3572**, dated 09/09/02, both signed and sealed by Joseph C. Chan, P.E.; **FTL-3424** dated 04/18/02, **FTL-3425** dated 04/29/02, **FTL-3426** dated 04/26/02, **FTL-3492** dated 06/20/02, **FTL-3493**, dated 06/24/02 and **FTL-3516** dated 07/12/02, all signed and sealed by James G. Worth, P.E.
(Submitted under NOA No. 02-1126.04)

Ishaq I. Chanda

Ishaq I. Chanda, P.E.
Product Control Unit Supervisor
NOA No. 24-0116.13
Expiration Date: February 13, 2028
Approval Date: February 01, 2024

NOTICE OF ACCEPTANCE: EVIDENCE SUBMITTED

1. EVIDENCE SUBMITTED UNDER PREVIOUS NOA's (CONTINUED)

C. CALCULATIONS

1. Anchor verification calculations and structural analysis, complying with **FBC**, dated 04/28/15, prepared by manufacturer, signed and sealed by Thomas J. Sotos, P.E. ***(Submitted under NOA No. 14-0908.02)***

2. Glazing complies with **ASTM E 1300-04/09.**

D. QUALITY ASSURANCE

1. Miami-Dade Department of Regulatory and Economic Resources (RER)

E. MATERIAL CERTIFICATIONS

1. Notice of Acceptance No. **17-0808.02** issued to **Kuraray America, Inc.** for their **"SentryGlas® (Clear and White) Glass Interlayers**" dated 12/28/17, expiring on 07/04/23.

2. Notice of Acceptance No. **19-0305.02** issued to **Kuraray America, Inc.** for their "**Trosifol® Ultraclear, Clear and Color PVB Glass Interlayers**" dated 05/09/19, expiring on 07/08/24.

3. Notice of Acceptance No. **21-0216.01** issued to **Eastman Chemical Company (MA)** for their "**Saflex PVB Interlayers - Clear and Colored for Glass**" dated 04/29/21, expiring on 05/21/26.

F. STATEMENTS

1. Statement letter of conformance to and complying with **FBC 7th Edition (2020)**, dated January 13, 2023, issued by manufacturer, signed and sealed by Thomas J. Sotos, P.E. ***(Submitted under NOA No. 23-0119.03)***

2. Statement letter of no financial interest dated January 13, 2023, issued by manufacturer, signed and sealed by Thomas J. Sotos, P.E. ***(Submitted under NOA No. 23-0119.03)***

3. Laboratory compliance letters for Test Reports No. **HETI-11-3269** dated 05/16/11, **HETI-11-3270** dated 05/16/11, **HETI-11-3271** dated 10/20/11, **HETI-11-3272** dated 10/20/11, **HETI-11-3274** dated 10/20/11, **HETI-11-3275** dated 10/20/11, **HETI-11-3291** dated 07/15/11, **HETI-11-3292** dated 10/20/11, **HETI-11-3307** dated 10/03/11, **HETI-11-3313** dated 10/20/11, **HETI-11-3314** dated 10/20/11, **HETI-11-3329** dated 01/16/12, **HETI-11-3330** dated 01/16/12, **HETI-12-4040** dated 10/12/12, **HETI-12-4041** dated 10/12/12, **HETI-12-4051** dated 06/13/12, **HETI-12-4052** dated 07/10/12, **HETI-12-4053** dated 09/24/12, **HETI-12-4054** dated 09/24/12, **HETI-12-4064** dated 09/24/12, and **HETI-12-4065** dated 09/24/12, issued by Hurricane Engineering & Testing, Inc., all signed and sealed by Rafael E. Droz-Seda, P.E.***(Submitted under NOA No. 14-0908.02)***

Ishaq I. Chanda

Ishaq I. Chanda, P.E.
Product Control Unit Supervisor
NOA No. 24-0116.13
Expiration Date: February 13, 2028
Approval Date: February 01, 2024

NOTICE OF ACCEPTANCE: EVIDENCE SUBMITTED

1. EVIDENCE SUBMITTED UNDER PREVIOUS NOA's (CONTINUED)

F. STATEMENTS (CONTINUED)

4. Laboratory addendum letter for Test Reports No. **HETI-11-3269**, **HETI-11-3270**, **HETI-11-3271**, **HETI-11-3272**,**HETI-11-3274**, **HETI-11-3275**, **HETI-11-3291**, **HETI-11-3292**, **HETI-11-3307**, **HETI-11-3313**, **HETI-11-3314**, **HETI-11-3329**, **HETI-11-3330**, **HETI-12-4040**, **HETI-12-4041**, **HETI-12-4051**, **HETI-12-4052**, **HETI-12-4053** , **HETI-12-4054**, **HETI-12-4064** and **HETI-12-4065**, dated 01/15/13, issued by Hurricane Engineering & Testing, Inc., signed and sealed by Rafael E. Droz-Seda, P.E.
(Submitted under NOA No. 12-1204.12)

5. Proposal issued by Product Control, dated 03/30/12, signed by Jaime D. Gascon, P.E.
(Submitted under NOA No. 12-1204.12)

6. Proposal issued by Product Control, dated 03/13/08, signed by Ishaq Chanda, P.E.
(Submitted under NOA No. 11-0518.03)

7. Laboratory compliance letters issued by Fenestration Testing Laboratory, Inc., for Test Report No. **FTL-3078** dated 01/10/02, signed and sealed by Luis Figueredo, P.E.
(Submitted under NOA No. 02-1126.04)

8. Laboratory compliance letters issued by Fenestration Testing Laboratory, Inc., for Test Reports No. **FTL-3525** and **FTL-3572** dated 09/09/02, both signed and sealed by Joseph C. Chan, P.E.
(Submitted under NOA No. 02-1126.04)

9. Laboratory compliance letters issued by Fenestration Testing Laboratory, Inc., for Test Reports No. **FTL-3424** dated 04/18/02, **FTL-3425** dated 04/29/02, **FTL-3426** dated 04/26/02, **FTL-3492** dated 06/20/02, **FTL-3493** dated 06/24/02 and **FTL-3516** dated 07/12/02, all signed and sealed by James G. Worth, P.E.
(Submitted under NOA No. 02-1126.04)

G. OTHERS

1. Notice of Acceptance No. **20-0901.06**, issued to Lawson Industries, Inc. for their Series **"SGD-9200 Aluminum Sliding Glass Door (Steel reinforced) – L.M.I."**, approved on 12/03/20 and expiring on 02/13/18.

Ishaq I. Chanda

Ishaq I. Chanda, P.E.
Product Control Unit Supervisor
NOA No. 24-0116.13
Expiration Date: February 13, 2028
Approval Date: February 01, 2024

NOTICE OF ACCEPTANCE: EVIDENCE SUBMITTED

2. New Evidence submitted.

A. DRAWINGS

1. Drawing No. **CWS-1223,** titled "7900 Aluminum Sliding Door-Impact", sheets 1 through 14 of 14, dated DEC 18, 2023, prepared by manufacturer, signed and sealed by Thomas J. Sotos, P.E.

B. TESTS (submitted under NOA# 23-1012.04)

1. None.

C. CALCULATIONS (submitted under NOA# 23-1012.04)

1. None.

D. QUALITY ASSURANCE

1. Miami Dade Department of Regulatory and Economic Resources (RER).

E. MATERIAL CERTIFICATIONS

1. Notice of Acceptance No. **23-0717.30** issued to **Kuraray America, Inc.** for their "**Trosifol® Ultraclear, Clear and Color PVB Glass Interlayers**", expiring on 07/04/28.

F. STATEMENTS

1. Statement letter of conformance, complying with **FBC 8th Edition (2023)** dated December 18, 2023, issued by manufacturer, signed and sealed by Thomas J. Sotos P.E.

G. OTHER

1. This NOA **revises** NOA # **23-1012.04 (**PVT Lawson Industries, Inc.), expiring 06/05/28.
2. Private Label agreement dated January 11, 2024 between Lawson Industries Inc. and Custom Window System Inc., signed respectively by Kevin E. Pine, VP Lawson Industries, Inc. and Kevin E. Pine, VP Custom Window System, Inc.

Ishaq I. Chanda

Ishaq I. Chanda, P.E.
Product Control Unit Supervisor
NOA No. 24-0116.13
Expiration Date: February 13, 2028
Approval Date: February 01, 2024

MULTI-SLIDE DOOR ELEVATIONS WITH & WITHOUT POCKETS

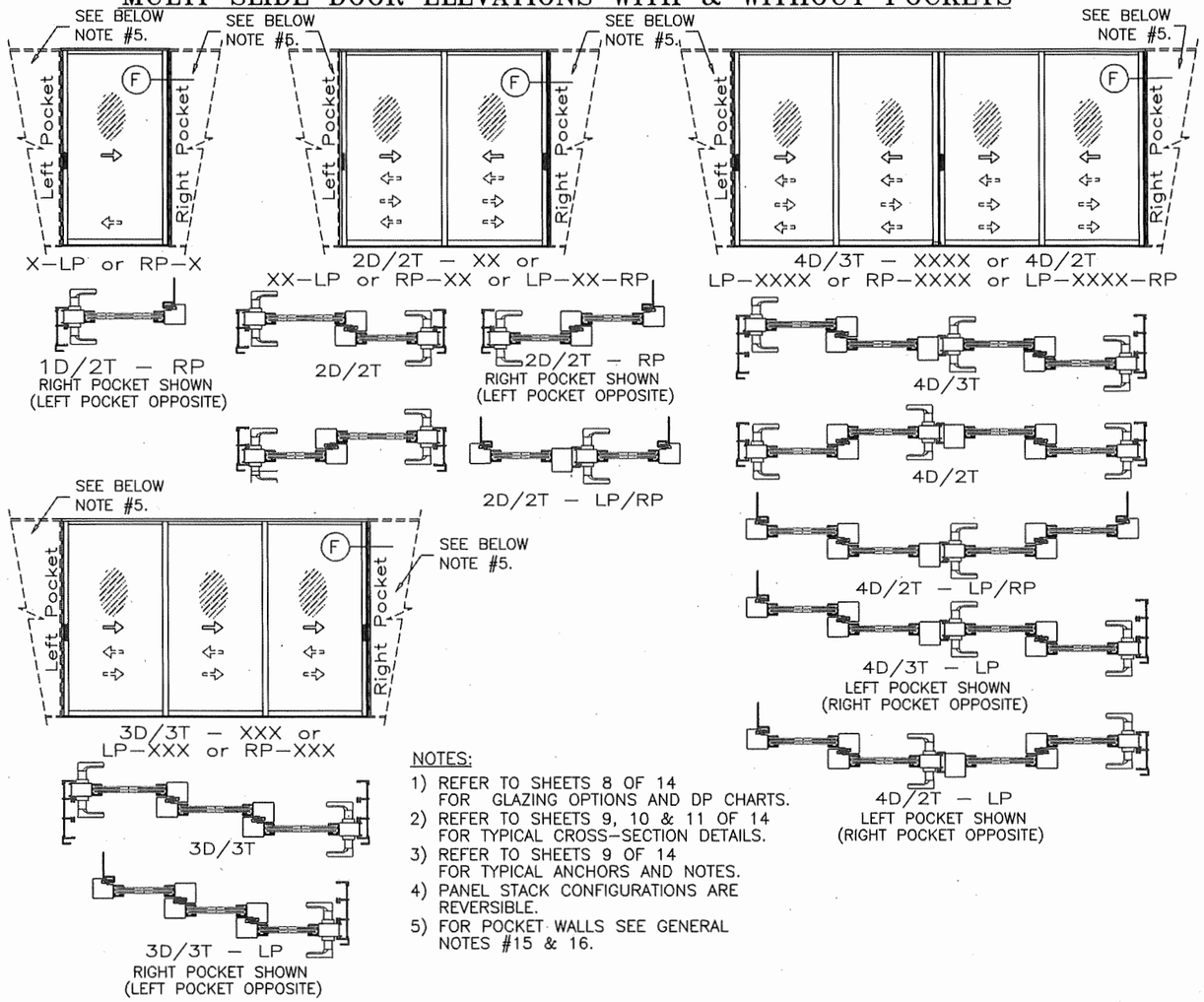

NOTES:

1) REFER TO SHEETS 8 OF 14 FOR GLAZING OPTIONS AND DP CHARTS.
2) REFER TO SHEETS 9, 10 & 11 OF 14 FOR TYPICAL CROSS-SECTION DETAILS.
3) REFER TO SHEETS 9 OF 14 FOR TYPICAL ANCHORS AND NOTES.
4) PANEL STACK CONFIGURATIONS ARE REVERSIBLE.
5) FOR POCKET WALLS SEE GENERAL NOTES #15 & 16.

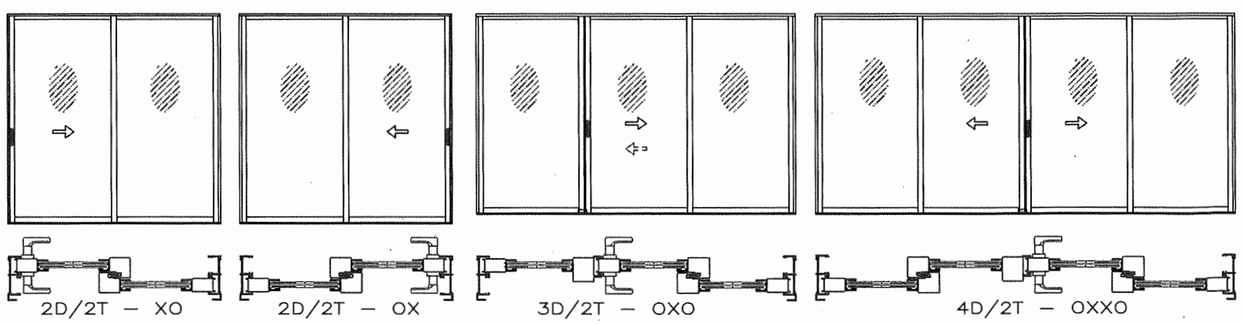

2 DOOR

NOTES:

1) REFER TO SHEETS 2 OF 14 FOR FOR GLAZING OPTIONS AND DP CHARTS.
2) REFER TO SHEETS 3 & 4 OF 14 FOR TYPICAL CROSS-SECTION DETAILS.
3) REFER TO SHEETS 3 OF 14 FOR TYPICAL ANCHORS AND NOTES.

3 & 4 DOOR

NOTES:

1) REFER TO SHEETS 5 OF 14 FOR GLAZING OPTIONS AND DP CHARTS.
2) REFER TO SHEETS 6 & 7 OF 14 FOR TYPICAL CROSS-SECTION DETAILS.
3) REFER TO SHEETS 6 OF 14 FOR TYPICAL ANCHORS AND NOTES.

General Notes:

1.) THIS DOOR SYSTEM IS DESIGNED AND TESTED TO COMPLY W/ THE REQUIREMENTS OF THE FLORIDA BUILDING CODE (2020-7th Edition & 2023-8th Edition) INCLUDING THE HIGH VELOCITY HURRICANE ZONE VELOCITY (HVHZ) AND ASTM 1300-09. THIS PRODUCT IS IMPACT RESISTANT. (SHUTTERS NOT REQUIRED)

2.) WOOD BUCKS SHALL BE INSTALLED AND ANCHORED SO THAT THE BUILDING RESISTS THE SUPERIMPOSED LOADS IN ACCORDANCE WITH THE REQUIREMENTS OF THE FLORIDA BUILDING CODE & TO BE REVIEWED BY BUILDING OFFICIAL.

3.) ANCHORS SHOWN ABOVE ARE AS PER TEST UNITS. ANCHORS ON ALL DOOR SIZES ARE NOT TO EXCEED THESE MAXIMUM SPACINGS ON CENTER (O.C.) AND AS TABULATED ON SHEETS 2, 5, & 8 of 14.

4.) ANCHOR CONDITIONS NOT DESCRIBED IN THESE DRAWING'S ARE TO BE ENGINEERED ON A SITE SPECIFIC BASIS, UNDER A SEPARATE APPROVAL AND TO BE REVIEWED BY BUILDING OFFICIAL.

5.) A LOAD DURATION INCREASE IN ALLOWABLE STRESS IS USED IN DESIGN OF ANCHORS INTO WOOD ONLY.

6.) DOORS ARE QUALIFIED FOR USE WITH SINGLE GLAZE H.S. LAMINATED GLASS TYPES TABULATED HEREIN (SEE SHEETS # 2, 5, & 8).

7.) FOR OPTIONAL FRAME INSTALLATION DETAILS SEE SHEETS 3, 4, 6, 7, 9, 10, & 11 OF 14.

8.) EXT. & INT. FALSE COLONIAL MUNTINS ARE OPTIONAL & AND TO BE APPLIED W/ SILICONE.

9.) WOOD BUCKS IN CONTACT WITH CONCRETE MUST BE PRESSURE TREATED AND ANCHORED (BY OTHERS), PRIOR TO DOOR INSTALLATION. WOOD BUCKS TO BE ANCHORED IN COMPLIANCE WITH THE FLORIDA BUILDING CODE CHAPTER 24.

10.) APPROVAL APPLIES TO TWO TRACK AND THREE TRACK DOORS WITH FIXED PANELS, ALL MOVING PANELS, INCLUDING WITH OR WITHOUT (LH-RH) POCKETS.

11.) MULLING DOORS WITH OTHER TYPES OF MIAMI-DADE COUNTY APPROVED PRODUCTS USING A MIAMI-DADE COUNTY APPROVED MULLION IN BETWEEN ARE ACCEPTABLE BUT THE LOWER DESIGN PRESSURE FROM THE DOORS OR MULLION APPROVAL WILL APPLY TO THE ENTIRE MULLED SYSTEM.

12.) FOR METAL ATTACHMENT DETAILS & NOTES SEE SHEETS # 3, 4, 6, 7, 9, 10, & 11 OF 14.

13.) ALL METAL/STEEL IN CONTACT WITH ALUMINUM OR OTHER DISSIMILAR MATERIALS TO BE PAINTED OR PLATED AND SHALL MEET THE FLORIDA BUILDING CODE.

14.) POCKET DOOR CONFIGURATIONS ARE AS SHOWN ON SHEET 8 OF 14, REFER TO SHEET 11 OF 14 FOR ADDITIONAL DETAILS.

15.) POCKET WALLS ARE NOT PART OF THIS APPROVAL.

16.) POCKET WALLS SHALL BE UNDER SEPARATE APPROVAL AND TO BE REVIEWED BY THE ENGINEER OF RECORD (EOR).

LAMINATED GLASS
LARGE MISSILE IMPACT

DOORS GLAZED WITH LAMINATED GLASS RATED FOR LARGE MISSILE IMPACT AND REQUIRE NO SHUTTERS.

PRODUCT REVISED
as complying with the Florida Building Code
NOA-No. 24-0116.13
Expiration Date 02/13/2028
By Ishwar I. Chanda
Miami-Dade Product Control

CWS
1900 SW 44TH AVE.
OCALA, FLORIDA 34474
WWW.CWS.CC

7900 ALUMINUM SLIDING DOOR - IMPACT

NO.:	DESCRIPTION:	BY:	DATE:

REVISIONS

THOMAS J. SOTOS LICENSE No. 55225 STATE OF FLORIDA PROFESSIONAL ENGINEER

DATE DEC 18 2023

THOMAS J. SOTOS, P.E.
FL. P.E. LIC. # 55225

SHEET DESCRIPTION:
APPROVED ELEVATIONS, DOOR CONFIGURATIONS AND GENERAL NOTES

DRAWN BY:	DATE:
N. Erazo	12/18/2023
REV. BY: ---	DATE: ---
DWG #: CWS-1223	REV #:
SCALE: ---	SHEET 1 OF 14

DESIGN LOAD CAPACITY – PSF (STD. 2 1/4" SILL)									
NOMINAL DOOR SIZES WIDTH FT./IN.	HEIGHT FT./IN.	GLASS TYPE 'A'		GLASS TYPE 'B'		GLASS TYPE 'C'		GLASS TYPE 'D'	
		EXT. (+)	INT. (–)	EXT. (+)	INT. (–)	EXT. (+)	INT. (–)	EXT. (+)	INT. (–)
5/0 (NO STEEL)	6/8	56.7	95.0	56.7	65.0	56.7	85.0	56.7	75.0
6/0 (NO STEEL)	6/8	56.7	95.0	56.7	65.0	56.7	85.0	56.7	75.0
8/0 (WITH STEEL)	6/8	56.7	85.0	56.7	70.0	56.7	78.8	56.7	68.8
8/0 (WITH STEEL)	8/0	56.7	65.0	56.7	65.0	X	X	X	X

DESIGN LOAD CAPACITY – PSF (WITH 3" SILL RISER)									
NOMINAL DOOR SIZES WIDTH FT./IN.	HEIGHT FT./IN.	GLASS TYPE 'A'		GLASS TYPE 'B'		GLASS TYPE 'C'		GLASS TYPE 'D'	
		EXT. (+)	INT. (–)	EXT. (+)	INT. (–)	EXT. (+)	INT. (–)	EXT. (+)	INT. (–)
5/0 (NO STEEL)	6/8	76.7	95.0	65.0	65.0	76.7	85.0	75.0	75.0
6/0 (NO STEEL)	6/8	76.7	95.0	65.0	65.0	76.7	85.0	75.0	75.0
8/0 (WITH STEEL)	6/8	76.7	85.0	70.0	70.0	76.7	78.8	68.8	68.8
8/0 (WITH STEEL)	8/0	65.0	65.0	65.0	65.0	X	X	X	X

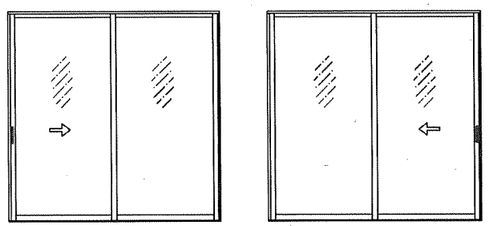

APPROVED CONFIGURATIONS

(FOR PANEL STACK CONFIGURATIONS SEE SHEET 1.)

NOTES:

1) REFER TO SHEETS 3 & 4 OF 14 FOR TYPICAL CROSS-SECTION DETAILS.
2) REFER TO SHEETS 3 OF 14 FOR TYPICAL ANCHORS AND NOTES.

MAX. D.L.O.:
6/0 X 6/8 = 32-3/4" X 74-3/4"
8/0 X 6/8 = 44-3/4" X 74-3/4"
8/0 X 8/0 = 44-3/4" X 90-3/4"

LAMINATED GLASS
LARGE MISSILE IMPACT

DOORS GLAZED WITH LAMINATED GLASS RATED FOR LARGE MISSILE IMPACT AND REQUIRE NO SHUTTERS.

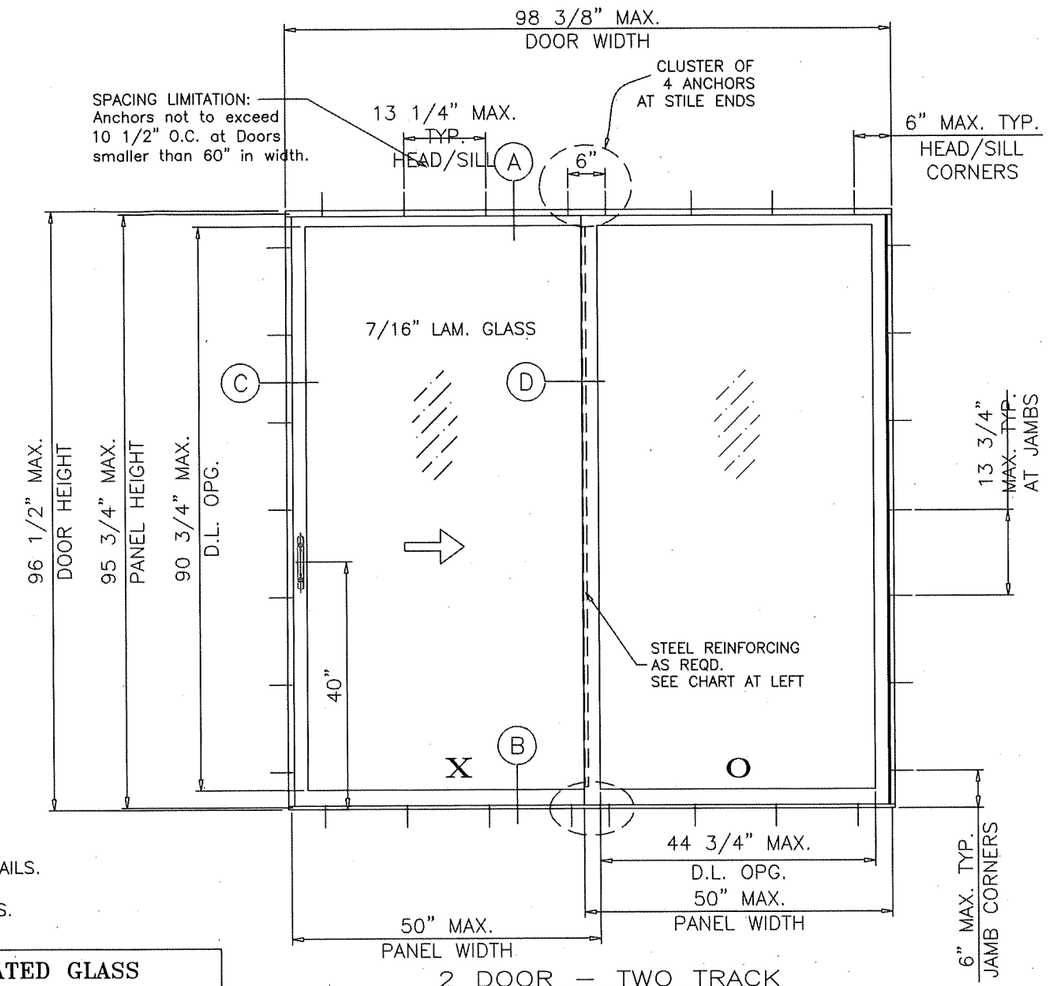

2 DOOR – TWO TRACK
"XO" TYPICAL ELEVATION
TESTED UNIT

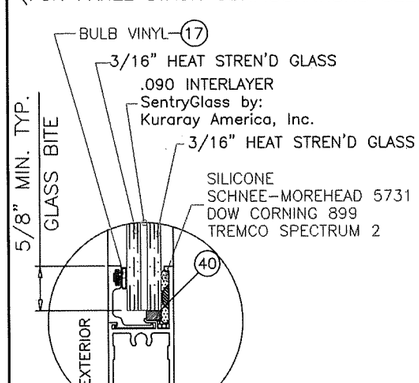

GLASS TYPE 'A'

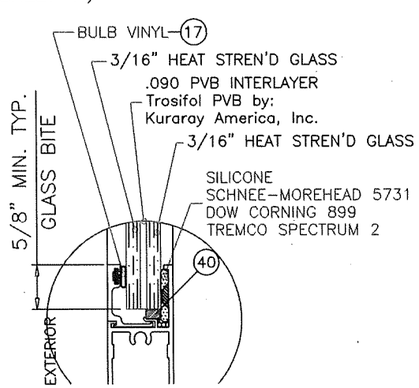

GLASS TYPE 'B'

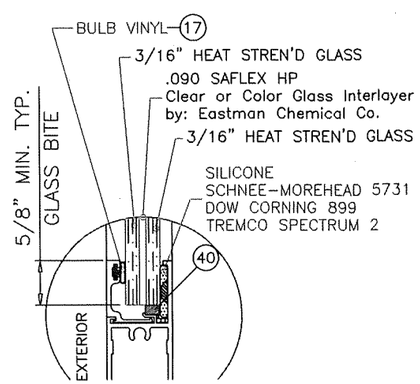

GLASS TYPE 'C'

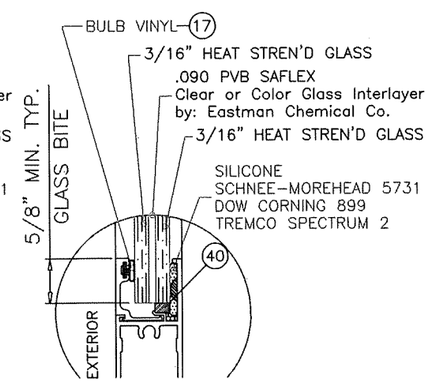

GLASS TYPE 'D'

GLAZING DETAILS

PRODUCT REVISED
as complying with the Florida Building Code
NOA-No. 24-0116.13
Expiration Date 02/13/2028
By Ishaq I. Chanda
Miami-Dade Product Control

CWS
1900 SW 44TH AVE.
OCALA, FLORIDA 34474
WWW.CWS.CC

7900 ALUMINUM SLIDING DOOR - IMPACT

NO.:	DESCRIPTION:	BY:	DATE:

REVISIONS

THOMAS J. SOTOS LICENSE No 55225 STATE OF FLORIDA PROFESSIONAL ENGINEER

DATE DEC 18 2023

THOMAS J. SOTOS, P.E.
FL. P.E. LIC. # 55225

SHEET DESCRIPTION:
APPROVED ELEVATIONS, GENERAL NOTES, GLAZING DETAILS & DP LOAD CHARTS

DRAWN BY:	DATE:
N. Erazo	12/18/2023
REV. BY: ---	DATE: ---
DWG #: CWS-1223	REV #:
SCALE: ---	SHEET 2 OF 14

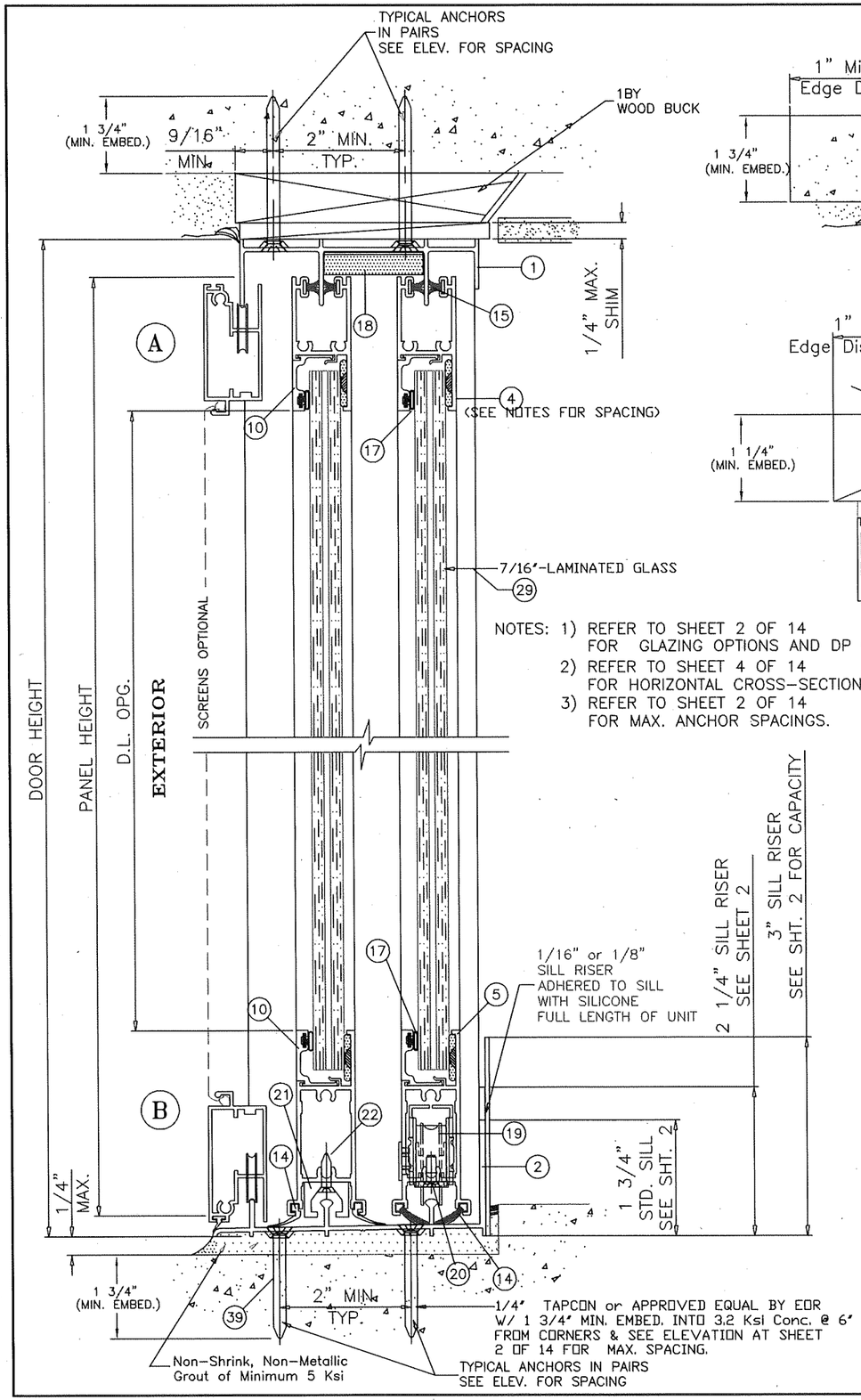

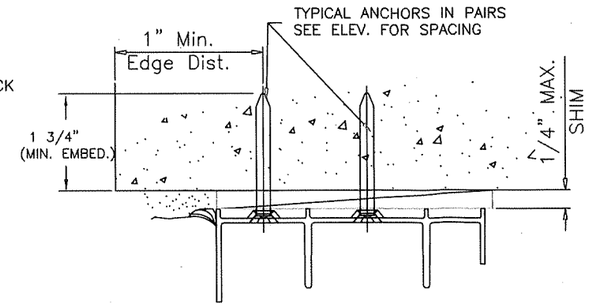

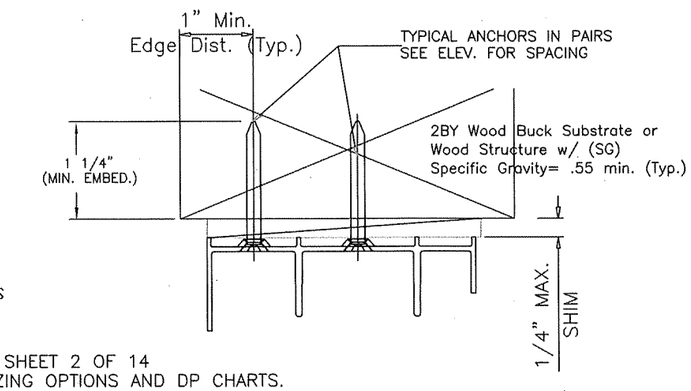

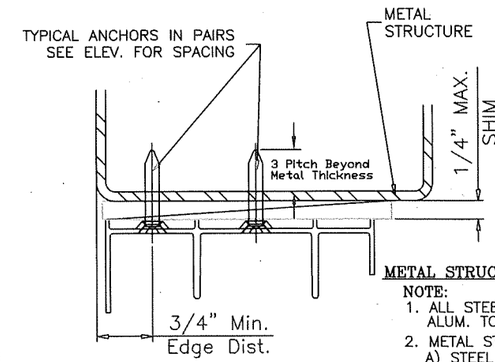

METAL STRUCTURE ATTACHMENT DETAILS

NOTE:
1. ALL STEEL IN CONTACT WITH ALUM. TO BE PAINTED OR PLATED.
2. METAL STRUCTURES:
   A) STEEL : Fy = 36 KSI MIN. (STEEL 12 GA. MIN. THICK = 0.105")
   B) ALUMINUM : 6063-T5 MIN. (ALUM. 0.078" MIN. THICK)

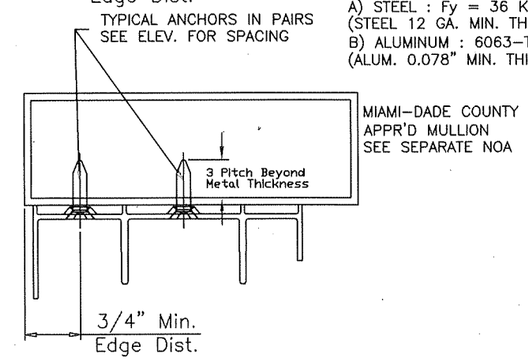

NOTES:
1) REFER TO SHEET 2 OF 14 FOR GLAZING OPTIONS AND DP CHARTS.
2) REFER TO SHEET 4 OF 14 FOR HORIZONTAL CROSS-SECTION DETAILS.
3) REFER TO SHEET 2 OF 14 FOR MAX. ANCHOR SPACINGS.

PRODUCT REVISED
as complying with the Florida Building Code
NOA-No. 24-0116.13
Expiration Date 02/13/2028
By Ishaq I. Chanda
Miami-Dade Product Control

WOOD BUCKS AND METAL STRUCTURES NOT BY CWS MUST SUPPORT LOADS IMPOSED BY GLAZING SYSTEM AND TRANSFER THEM TO THE BUILDING STRUCTURE.

TYPICAL ANCHORS: SEE ELEV. AT SHEET 8 FOR SPACING

ANCHOR TYPE CHART IN CONC. or MASONRY (min.)					
ANCHOR OPTIONS	HEAD-SILL	JAMB	Embedment	Edge Dist.	Concrete
ELCO ULTRACON	1/4"	1/4"	1 3/4"	1"	2.85 Ksi
BUILDEX	1/4"	–	1 3/4"	4"	3.2 Ksi
BUILDEX	–	3/16"	1 3/4"	3"	3.2 Ksi

ANCHOR TYPE CHART IN 2X WOOD BUCK (min.)					
ANCHOR OPTIONS	HEAD-SILL	JAMB	Embedment	Edge Dist.	2x Wood
ELCO ULTRACON	1/4"	1/4"	1 1/4"	1"	.55 SG
BUILDEX	1/4"	1/4"	1 1/4"	1"	.55 SG
S.M.S. (Into 2X)	#12	#12	1 1/4"	1"	.55 SG

1/4" DRILLFLEX SELF DRILLING SCREWS
INTO METAL STRUCTURES
STEEL : 12 GA. MIN. (Fy = 36 KSI MIN.)
ALUMINUM : 1/8" THK. MIN. (6063-T5 MIN.)
(STEEL IN CONTACT WITH ALUMINUM TO BE PLATED OR PAINTED)
#12 SMS
INTO APPROVED MULLIONS (NO SHIM SPACE)
TYPICAL EDGE DISTANCE
(1/4") INTO CONCRETE AND MASONRY = 1" MIN. (ELCO ULTRACON)
(1/4") INTO CONCRETE AND MASONRY = 4" MIN. (ITW BUILDEX)
(3/16") INTO CONCRETE AND MASONRY = 3" MIN. (ITW BUILDEX)
INTO WOOD STRUCTURE = 1" MIN.
INTO METAL STRUCTURE = 3/4" MIN.

SEALANTS:
FRAME AND VENT CORNERS AND INSTALLATION SCREWS AT SILL SEALED WITH WHITE/ALUMINUM COLORED SEALANT.

CWS
1900 SW 44TH AVE.
OCALA, FLORIDA 34474
WWW.CWS.CC

7900 ALUMINUM SLIDING DOOR - IMPACT

NO.:	DESCRIPTION:	BY:	DATE:

REVISIONS

THOMAS J. SOTOS LICENSE No. 55225 STATE OF FLORIDA PROFESSIONAL ENGINEER

DATE DEC 18 2023

THOMAS J. SOTOS, P.E.
FL. P.E. LIC. # 55225

SHEET DESCRIPTION:
2 TRACK VERTICAL CROSS SECTIONS, DETAILS & ANCHOR NOTES

DRAWN BY:	DATE:
N. Erazo	12/18/2023
REV. BY: ---	DATE: ---
DWG #: CWS-1223	REV #:
SCALE: ---	SHEET 3 OF 14

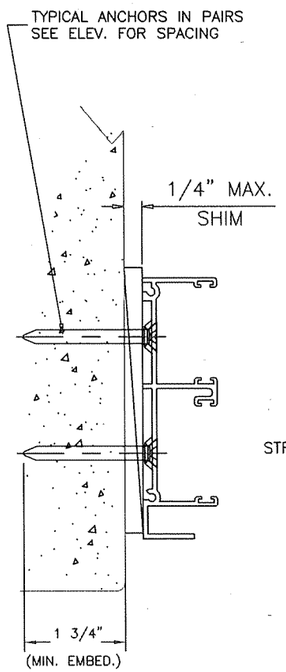

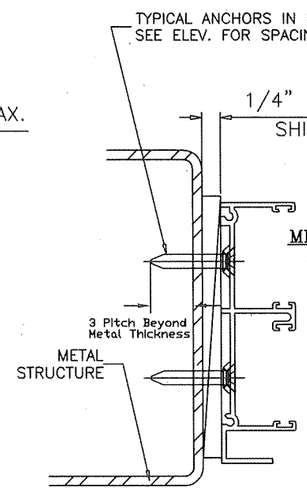

METAL STRUCTURE ATTACHMENT DETAIL

NOTE:

1. ALL STEEL IN CONTACT WITH ALUM. TO BE PAINTED OR PLATED.
2. METAL STRUCTURES:
   A) STEEL : Fy = 36 KSI MIN. (STEEL 12 GA. MIN. THICK = 0.105")
   B) ALUMINUM : 6063-T5 MIN. (ALUM. 0.078" MIN. THICK)

NOTES:
1) REFER TO SHEET 2 OF 14 FOR GLAZING OPTIONS AND DP CHARTS.
2) REFER TO SHEET 3 OF 14 FOR VERTICAL CROSS-SECTION DETAILS.
3) REFER TO SHEET 3 OF 14 FOR TYPICAL ANCHORS AND NOTES.
4) REFER TO SHEET 2 OF 14 FOR MAX. ANCHOR SPACINGS.

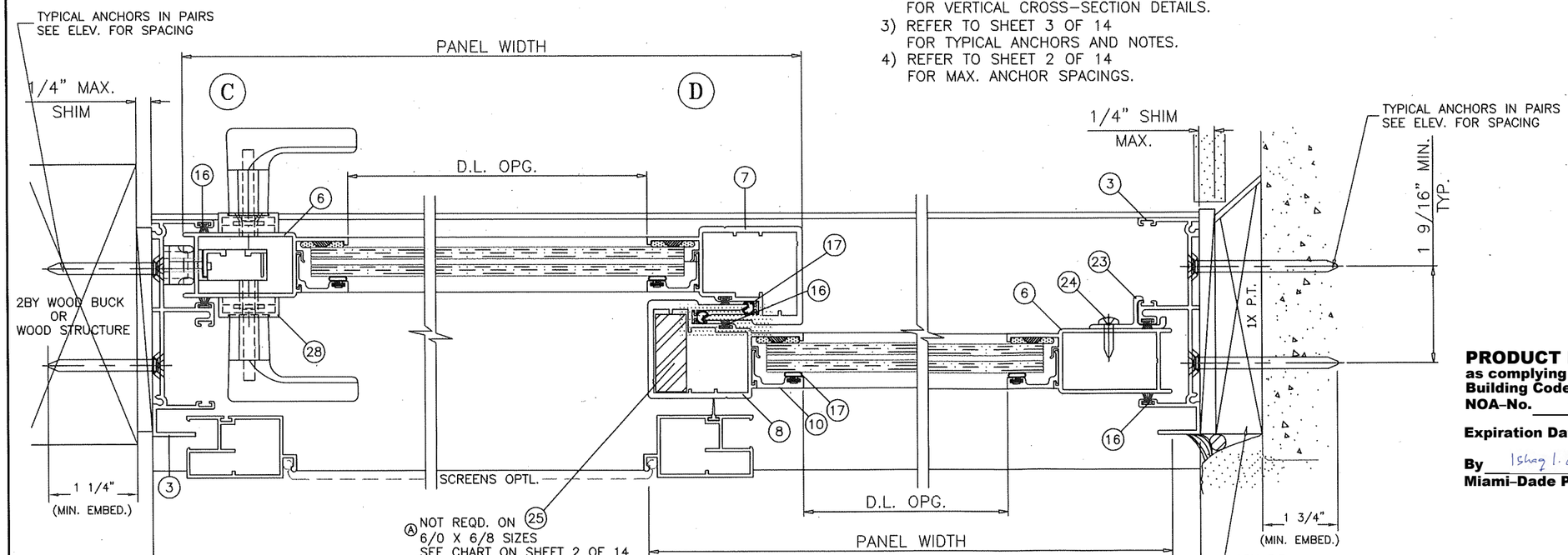

2D/2T – XO (Shown)

2D/2T – OX (Reversed)

PRODUCT REVISED
as complying with the Florida Building Code
NOA-No. 24-0116.13
Expiration Date 02/13/2028
By Ishwar I. Chanda
Miami-Dade Product Control

CWS
1900 SW 44TH AVE.
OCALA, FLORIDA 34474
WWW.CWS.CC

7900 ALUMINUM SLIDING DOOR - IMPACT

REVISIONS

NO.:	DESCRIPTION:	BY:	DATE:

THOMAS J. SOTOS LICENSE No 55225 STATE OF FLORIDA PROFESSIONAL ENGINEER

DATE DEC 18 2023

THOMAS J. SOTOS, P.E.
FL. P.E. LIC. # 55225

SHEET DESCRIPTION:
TWO DOOR HORIZONTAL CROSS SECTION, INSTALLATION DETAILS & NOTES

DRAWN BY:	DATE:
N. Erazo	12/18/2023
REV. BY: ---	DATE: ---
DWG #: CWS-1223	REV #:
SCALE: ---	SHEET 4 OF 14

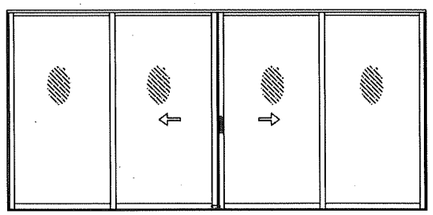

OXXO

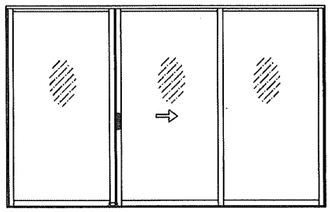

OXO

APPROVED CONFIGURATIONS

(FOR PANEL STACK CONFIGURATIONS SEE SHEET 1.)

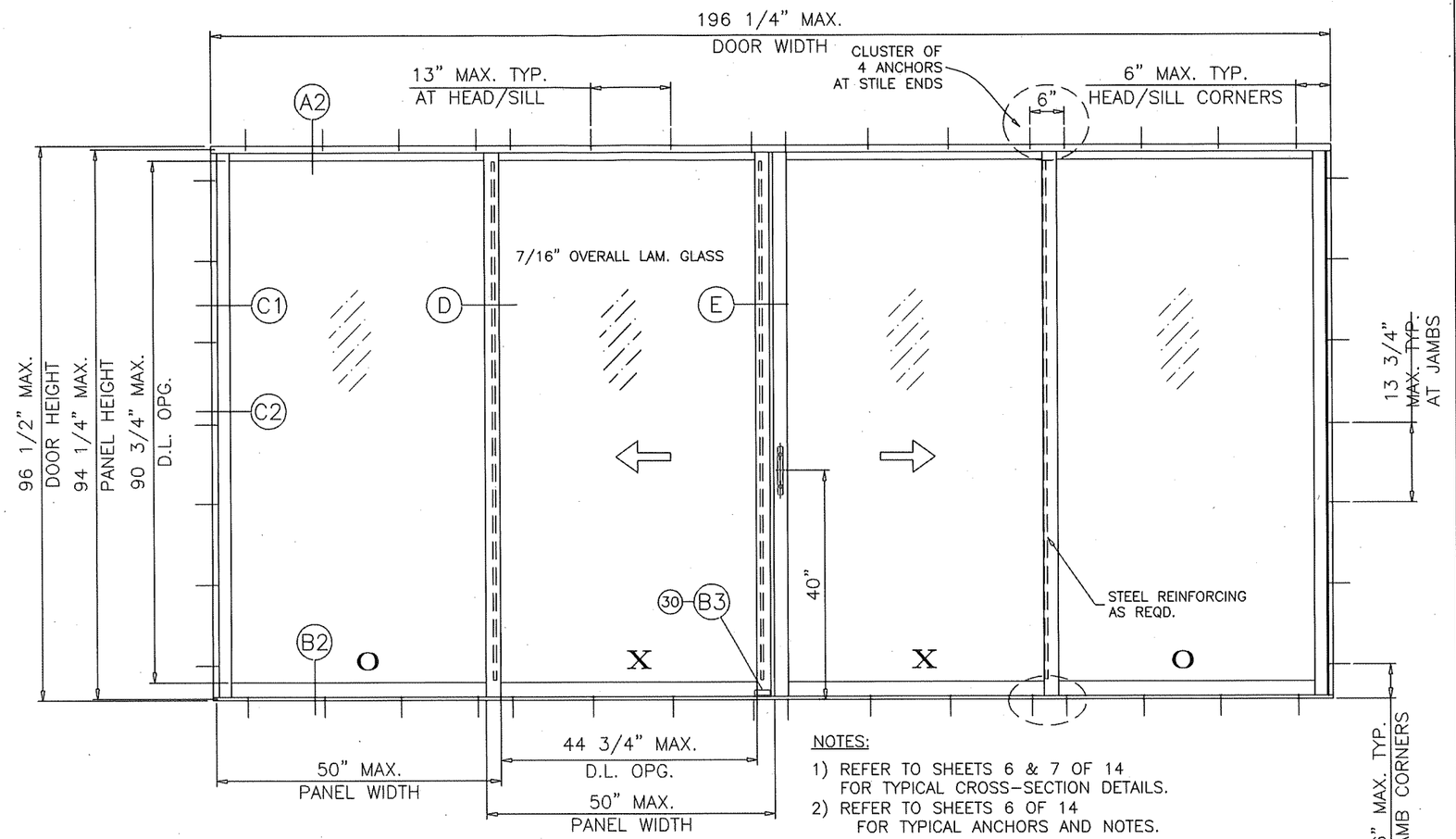

NOTES:

1) REFER TO SHEETS 6 & 7 OF 14 FOR TYPICAL CROSS-SECTION DETAILS.
2) REFER TO SHEETS 6 OF 14 FOR TYPICAL ANCHORS AND NOTES.

4 DOOR – TWO TRACK

"OXXO" TYPICAL ELEVATION

TESTED UNIT

LAMINATED GLASS
LARGE MISSILE IMPACT

DOORS GLAZED WITH LAMINATED GLASS RATED FOR LARGE MISSILE IMPACT AND REQUIRE NO SHUTTERS.

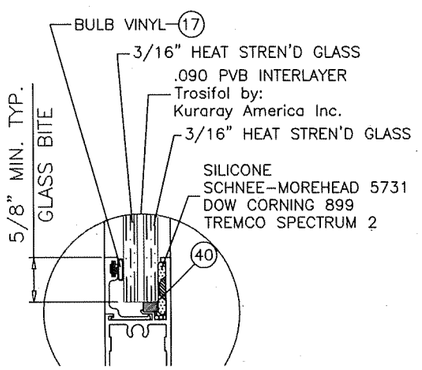

GLASS TYPE 'B'

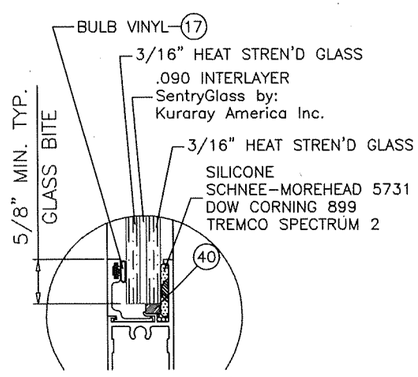

GLASS TYPE 'A'

GLAZING DETAILS

DESIGN LOAD CAPACITY – PSF GLASS TYPES 'A' OR 'B'							
PANEL WIDTH NOMINAL FT./IN.	DOOR HEIGHT FT./IN.	STANDARD SILL		2-1/4" RISER		3" RISER	
		EXT. (+)	INT. (–)	EXT. (+)	INT. (–)	EXT. (+)	INT. (–)
2/6	6/8	40.7	60.0	56.7	60.0	60.0	60.0
3/0		40.7	60.0	56.7	60.0	60.0	60.0
3/6		40.7	60.0	56.7	60.0	60.0	60.0
4/0		40.7	60.0	56.7	60.0	60.0	60.0
4/6		40.7	60.0	56.7	60.0	60.0	60.0
4/11		40.7	60.0	56.7	60.0	60.0	60.0
2/6	8/0	40.7	60.0	56.7	60.0	60.0	60.0
3/0		40.7	60.0	56.7	60.0	60.0	60.0
3/6		40.7	60.0	56.7	60.0	60.0	60.0
4/0		40.7	60.0	56.7	60.0	60.0	60.0

PRODUCT REVISED
as complying with the Florida Building Code
NOA-No. 24-0116.13
Expiration Date 02/13/2028
By Ishaq I. Chanda
Miami-Dade Product Control

PANEL MAX. D.L.O.:
3/0 X 6/8 = 32-3/4" X 74-3/4"
4/0 X 6/8 = 44-3/4" X 74-3/4"
4/11 X 6/8 =55-3/4" X 74-3/4"
3/0 X 8/0 = 32-3/4" X 90-3/4"
4/0 X 8/0 = 44-3/4" X 90-3/4"

CWS
1900 SW 44TH AVE.
OCALA, FLORIDA 34474
WWW.CWS.CC

7900 ALUMINUM SLIDING DOOR - IMPACT

NO.:	DESCRIPTION:	BY:	DATE:

REVISIONS

THOMAS J. SOTOS LICENSE No. 55225 STATE OF FLORIDA PROFESSIONAL ENGINEER

DATE DEC 18 2023

THOMAS J. SOTOS, P.E.
FL. P.E. LIC. # 55225

SHEET DESCRIPTION:
APPROVED ELEVATIONS, GENERAL NOTES, GLAZING DETAILS & DP LOAD CHARTS

DRAWN BY:	DATE:
N. Erazo	12/18/2023
REV. BY: ---	DATE: ---
DWG #: CWS-1223	REV #:
SCALE: ---	SHEET 5 OF 14

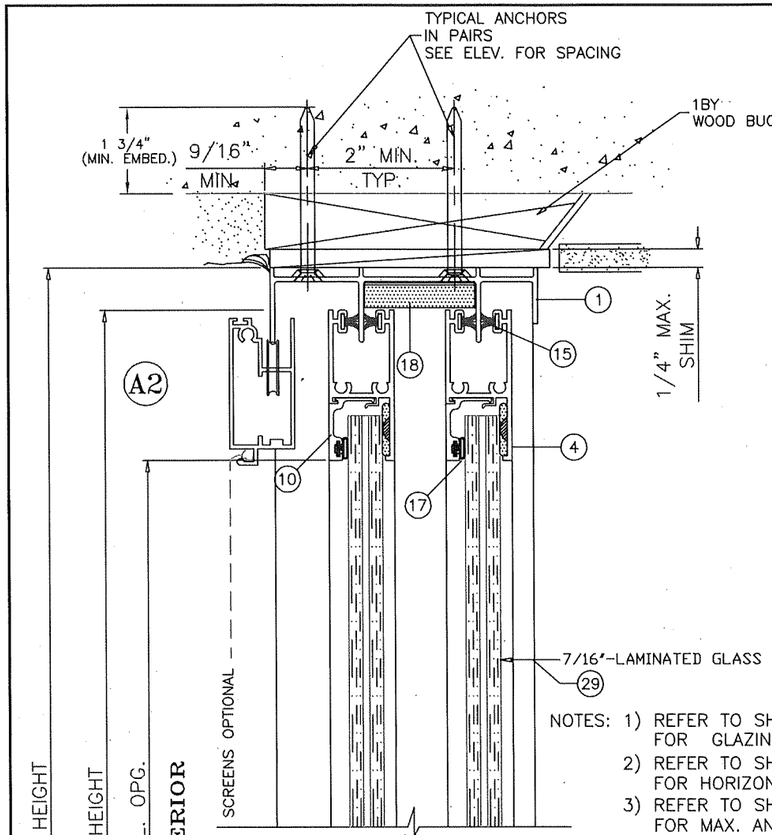

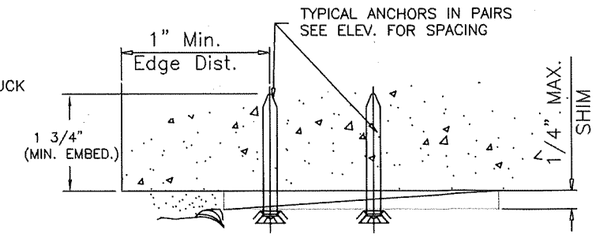

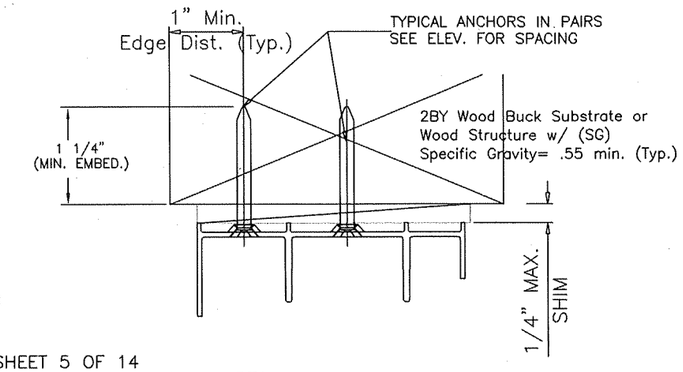

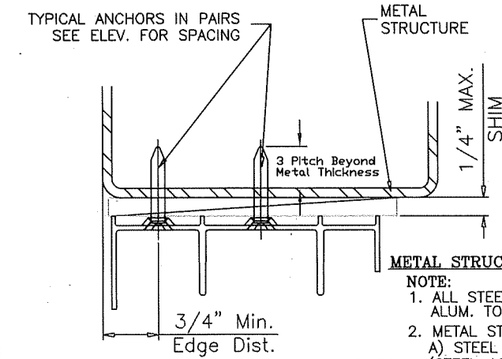

METAL STRUCTURE ATTACHMENT DETAILS

NOTE:
1. ALL STEEL IN CONTACT WITH ALUM. TO BE PAINTED OR PLATED.
2. METAL STRUCTURES:
   A) STEEL : Fy = 36 KSI MIN. (STEEL 12 GA. MIN. THICK = 0.105")
   B) ALUMINUM : 6063-T5 MIN. (ALUM. 0.078" MIN. THICK)

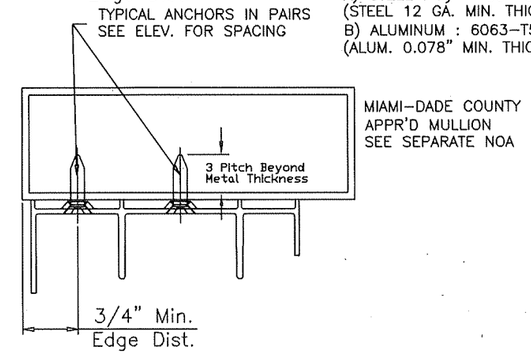

NOTES:
1) REFER TO SHEET 5 OF 14 FOR GLAZING OPTIONS AND DP CHARTS.
2) REFER TO SHEET 7 OF 14 FOR HORIZONTAL CROSS-SECTION DETAILS.
3) REFER TO SHEET 5 OF 14 FOR MAX. ANCHOR SPACINGS.

PRODUCT REVISED
as complying with the Florida Building Code
NOA-No. 24-0116.13
Expiration Date 02/13/2028
By Ishaq I. Chanda
Miami-Dade Product Control

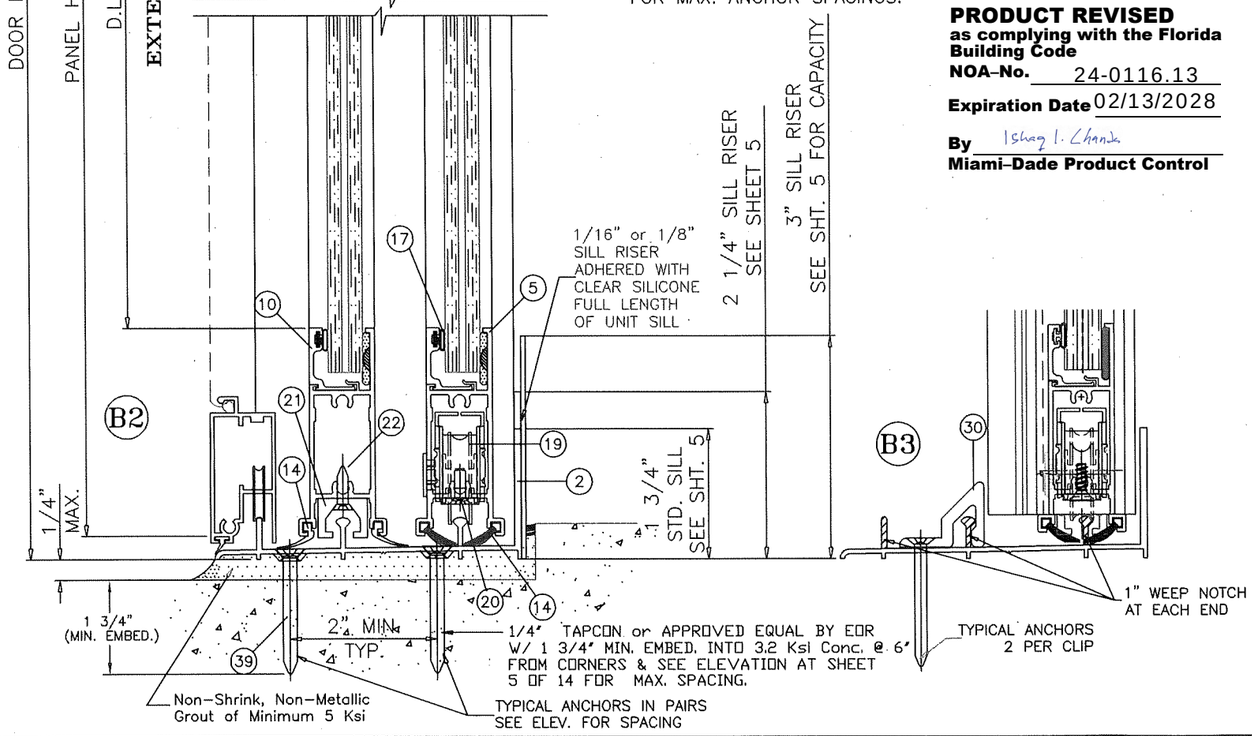

WOOD BUCKS AND METAL STRUCTURES NOT BY CWS MUST SUPPORT LOADS IMPOSED BY GLAZING SYSTEM AND TRANSFER THEM TO THE BUILDING STRUCTURE.

TYPICAL ANCHORS: SEE ELEV. AT SHEET 8 FOR SPACING

ANCHOR TYPE CHART IN CONC. or MASONRY (min.)					
ANCHOR OPTIONS	HEAD-SILL	JAMB	Embedment	Edge Dist.	Concrete
ELCO ULTRACON	1/4"	1/4"	1 3/4"	1"	2.85 Ksi
BUILDEX	1/4"	–	1 3/4"	4"	3.2 Ksi
BUILDEX	–	3/16"	1 3/4"	3"	3.2 Ksi

ANCHOR TYPE CHART IN 2X WOOD BUCK (min.)					
ANCHOR OPTIONS	HEAD-SILL	JAMB	Embedment	Edge Dist.	2x Wood
ELCO ULTRACON	1/4"	1/4"	1 1/4"	1"	.55 SG
BUILDEX	1/4"	1/4"	1 1/4"	1"	.55 SG
S.M.S. (Into 2X)	#12	#12	1 1/4"	1"	.55 SG

1/4" DRILLFLEX SELF DRILLING SCREWS
INTO METAL STRUCTURES
STEEL : 12 GA. MIN. (Fy = 36 KSI MIN.)
ALUMINUM : 1/8" THK. MIN. (6063-T5 MIN.)
(STEEL IN CONTACT WITH ALUMINUM TO BE PLATED OR PAINTED)
#10 SMS
INTO APPROVED MULLIONS (NO SHIM SPACE)
TYPICAL EDGE DISTANCE
(1/4") INTO CONCRETE AND MASONRY = 1" MIN. (ELCO ULTRACON)
(1/4") INTO CONCRETE AND MASONRY = 4" MIN. (ITW BUILDEX)
(3/16") INTO CONCRETE AND MASONRY = 3" MIN. (ITW BUILDEX)
INTO WOOD STRUCTURE = 1" MIN.
INTO METAL STRUCTURE = 3/4" MIN.

SEALANTS:
FRAME AND VENT CORNERS AND INSTALLATION SCREWS AT SILL SEALED WITH WHITE/ALUMINUM COLORED SEALANT.

CWS
1900 SW 44TH AVE.
OCALA, FLORIDA 34474
WWW.CWS.CC

7900 ALUMINUM SLIDING DOOR - IMPACT

NO.:	DESCRIPTION:	BY:	DATE:
	REVISIONS		

THOMAS J. SOTOS LICENSED No. 55225 STATE OF FLORIDA PROFESSIONAL ENGINEER

DATE DEC 18 2023

THOMAS J. SOTOS, P.E.
FL. P.E. LIC. # 55225

SHEET DESCRIPTION:
2 TRACK VERTICAL CROSS SECTIONS, DETAILS & ANCHOR NOTES

DRAWN BY: N. Erazo	DATE: 12/18/2023
REV. BY: ---	DATE: ---
DWG #: CWS-1223	REV #:
SCALE: ---	SHEET 6 OF 14

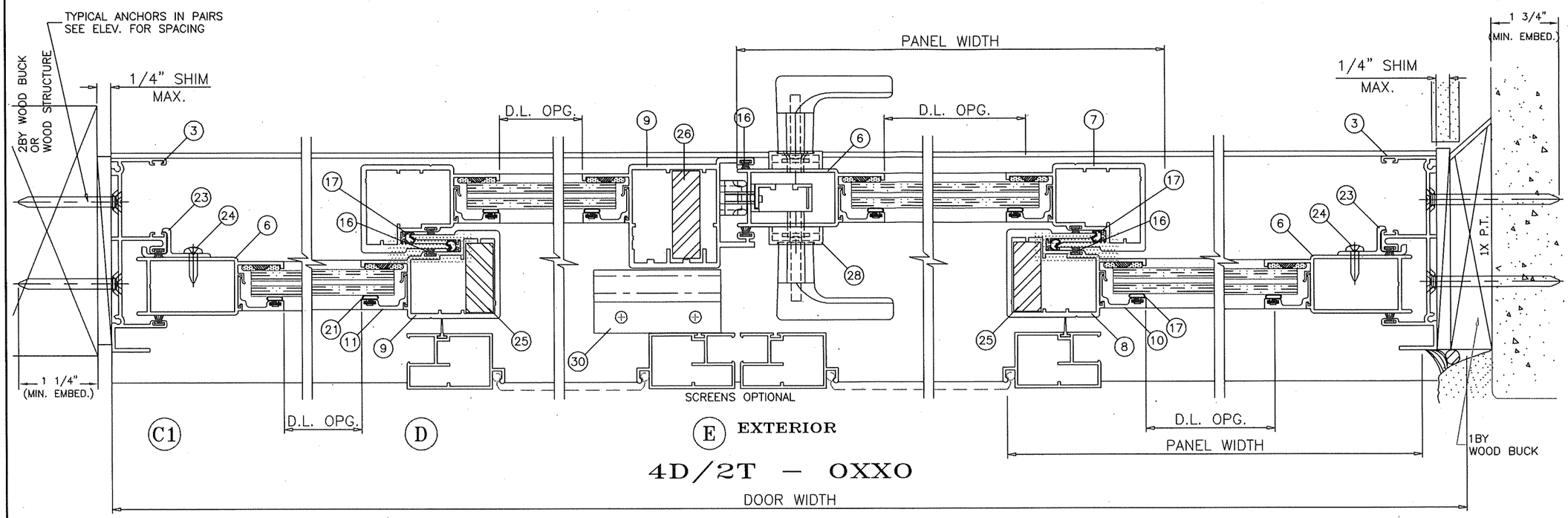

4D/2T – OXXO

NOTES:
1) REFER TO SHEET 5 OF 14 FOR GLAZING OPTIONS AND DP CHARTS.
2) REFER TO SHEET 6 OF 14 FOR VERTICAL CROSS-SECTION DETAILS.
3) REFER TO SHEET 6 OF 14 FOR TYPICAL ANCHORS AND NOTES.
4) REFER TO SHEET 5 OF 14 FOR MAX. ANCHOR SPACINGS.

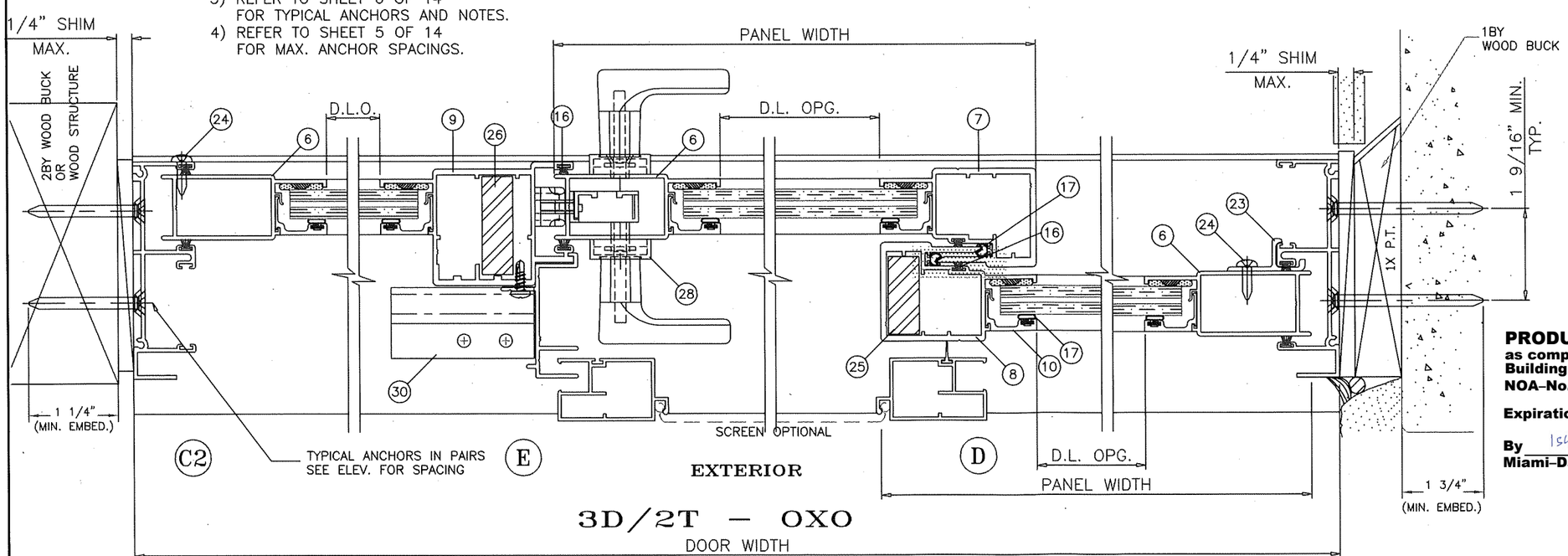

3D/2T – OXO

PRODUCT REVISED
as complying with the Florida Building Code
NOA-No. 24-0116.13
Expiration Date 02/13/2028
By Ishaq I. Chanda
Miami-Dade Product Control

CWS
1900 SW 44TH AVE.
OCALA, FLORIDA 34474
WWW.CWS.CC

7900 ALUMINUM SLIDING DOOR - IMPACT

NO.:	DESCRIPTION:	BY:	DATE:

REVISIONS

THOMAS J. SOTOS
STATE OF FLORIDA
PROFESSIONAL ENGINEER
No. 55225

DATE DEC 18 2023

THOMAS J. SOTOS, P.E.
FL. P.E. LIC. # 55225

SHEET DESCRIPTION:
TWO DOOR & THREE DOOR HORIZONTAL CROSS SECTIONS, & NOTES

DRAWN BY:	DATE:
N. Erazo	12/18/2023
REV. BY: ---	DATE: ---
DWG #: CWS-1223	REV #:
SCALE: ---	SHEET 7 OF 14

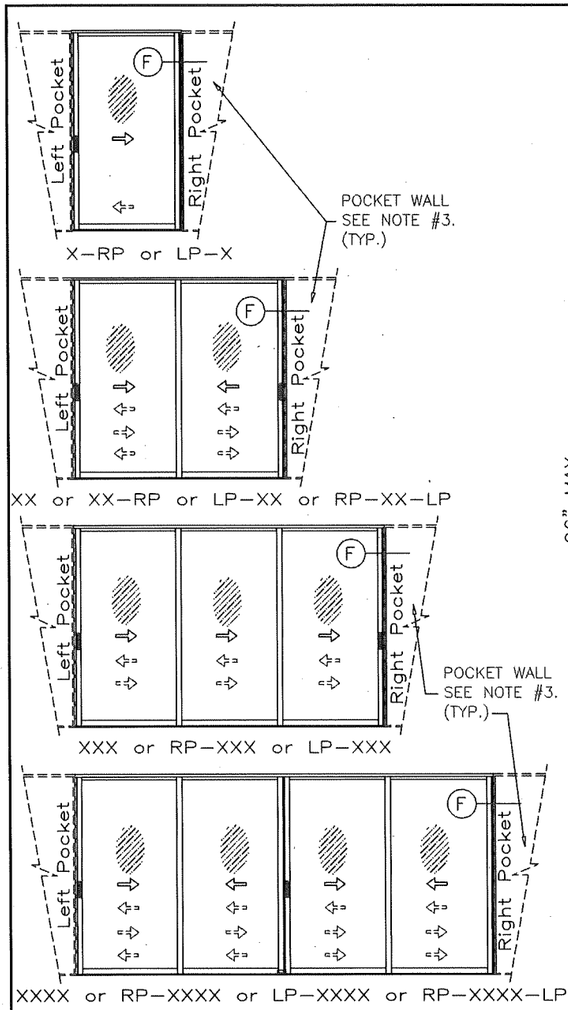

APPROVED CONFIGURATIONS WITH & WITHOUT POCKETS

(FOR PANEL STACK CONFIGURATIONS SEE SHEET 1.)

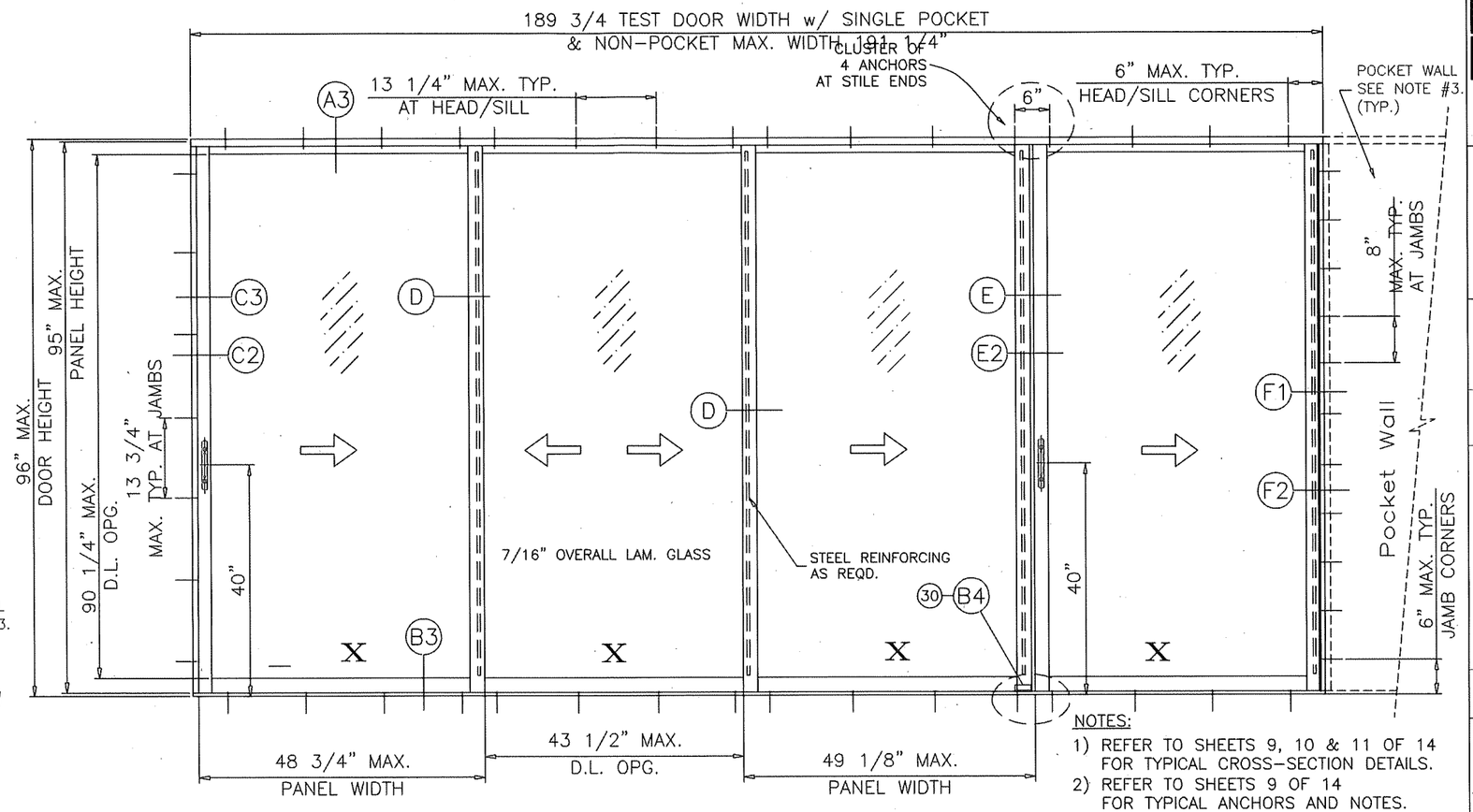

4 DOOR – THREE TRACK
"XXXX" TYPICAL ELEVATION
TESTED UNIT

PANEL MAX. D.L.O.:
3/0 X 6/8 = 31-1/2" X 74-1/4"
4/0 X 6/8 = 43-1/2" X 74-1/4"
3/0 X 8/0 = 31-1/2" X 90-1/4"
4/0 X 8/0 = 43-1/2" X 90-1/4"

NOTES:

1) REFER TO SHEETS 9, 10 & 11 OF 14 FOR TYPICAL CROSS-SECTION DETAILS.
2) REFER TO SHEETS 9 OF 14 FOR TYPICAL ANCHORS AND NOTES.
3) FOR POCKET WALLS SEE GENERAL NOTES #15 & 16 AT SHEET 1 OF 14.

DOORS GLAZED WITH LAMINATED GLASS RATED FOR LARGE MISSILE IMPACT AND REQUIRE NO SHUTTERS.

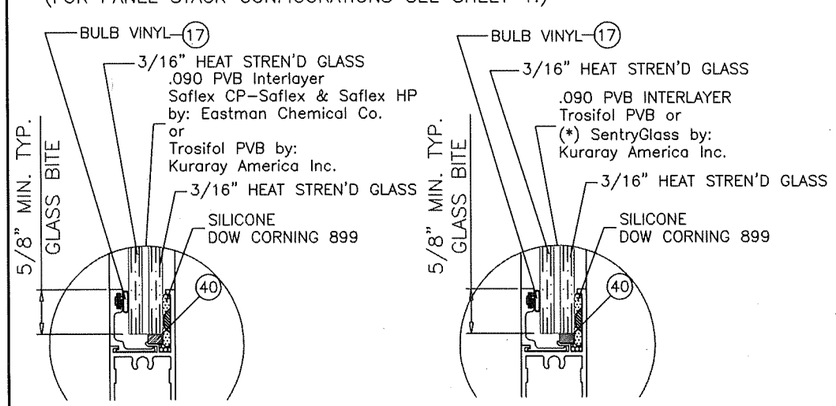

GLASS TYPE 'A' GLASS TYPE 'B'

GLAZING DETAILS

NOMINAL DOOR SIZES WIDTH FT./IN.	HEIGHT FT./IN.	DP CAPACITY – PSF (2 1/4" SILL) GLASS TYPE 'A' EXT. (+)	GLASS TYPE 'A' INT. (–)	GLASS TYPE 'B' EXT. (+)	GLASS TYPE 'B' INT. (–)	DP CAPACITY – PSF (3" SILL) GLASS TYPE 'A' EXT. (+)	GLASS TYPE 'A' INT. (–)	GLASS TYPE 'B' EXT. (+)	GLASS TYPE 'B' INT. (–)
8/0 (2DR) (W/ 1 STEEL)	8/0	56.7	68.0	56.7	68.0	68.0	68.0	68.0	68.0
8/0 (2DR) (W/ 2 STEEL)	8/0	56.7	68.0	56.7	68.0	68.0	68.0	(*) 68.0	(*) 68.0
12/0 (3DR) (W/ 1 STEEL)	8/0	56.7	68.0	56.7	68.0	–	–	68.0	68.0
12/0 (3DR) (W/ 2 STEEL)	8/0	56.7	68.0	56.7	68.0	68.0	68.0	(*) 68.0	(*) 68.0
16/0 (4DR) (W/ 1 STEEL)	8/0	53.3	60.0	53.3	60.0	60.0	60.0	60.0	60.0
16/0 (4DR) (W/ 2 STEEL)	8/0	53.3	68.0	53.3	68.0	68.0	68.0	68.0	68.0

(*) 2dr/3dr DOORS MEET +76.7 & –78.0 DP w/ "Kuraray 0.090" SG Laminate

LAMINATED GLASS
LARGE MISSILE IMPACT

PRODUCT REVISED
as complying with the Florida Building Code
NOA-No. 24-0116.13
Expiration Date 02/13/2028
By Ishaq I. Chanda
Miami-Dade Product Control

CWS
1900 SW 44TH AVE.
OCALA, FLORIDA 34474
WWW.CWS.CC

7900 ALUMINUM SLIDING DOOR - IMPACT

NO.:	DESCRIPTION:	BY:	DATE:

REVISIONS

THOMAS J. SOTOS LICENSE No. 55225 STATE OF FLORIDA PROFESSIONAL ENGINEER

DATE DEC 18 2023

THOMAS J. SOTOS, P.E.
FL. P.E. LIC. # 55225

SHEET DESCRIPTION:
APPROVED ELEVATIONS, GENERAL NOTES, GLAZING DETAILS & DP LOAD CHARTS

DRAWN BY:	DATE:
N. Erazo	12/18/2023
REV. BY: ---	DATE: ---
DWG #: CWS-1223	REV #:
SCALE: ---	SHEET 8 OF 14

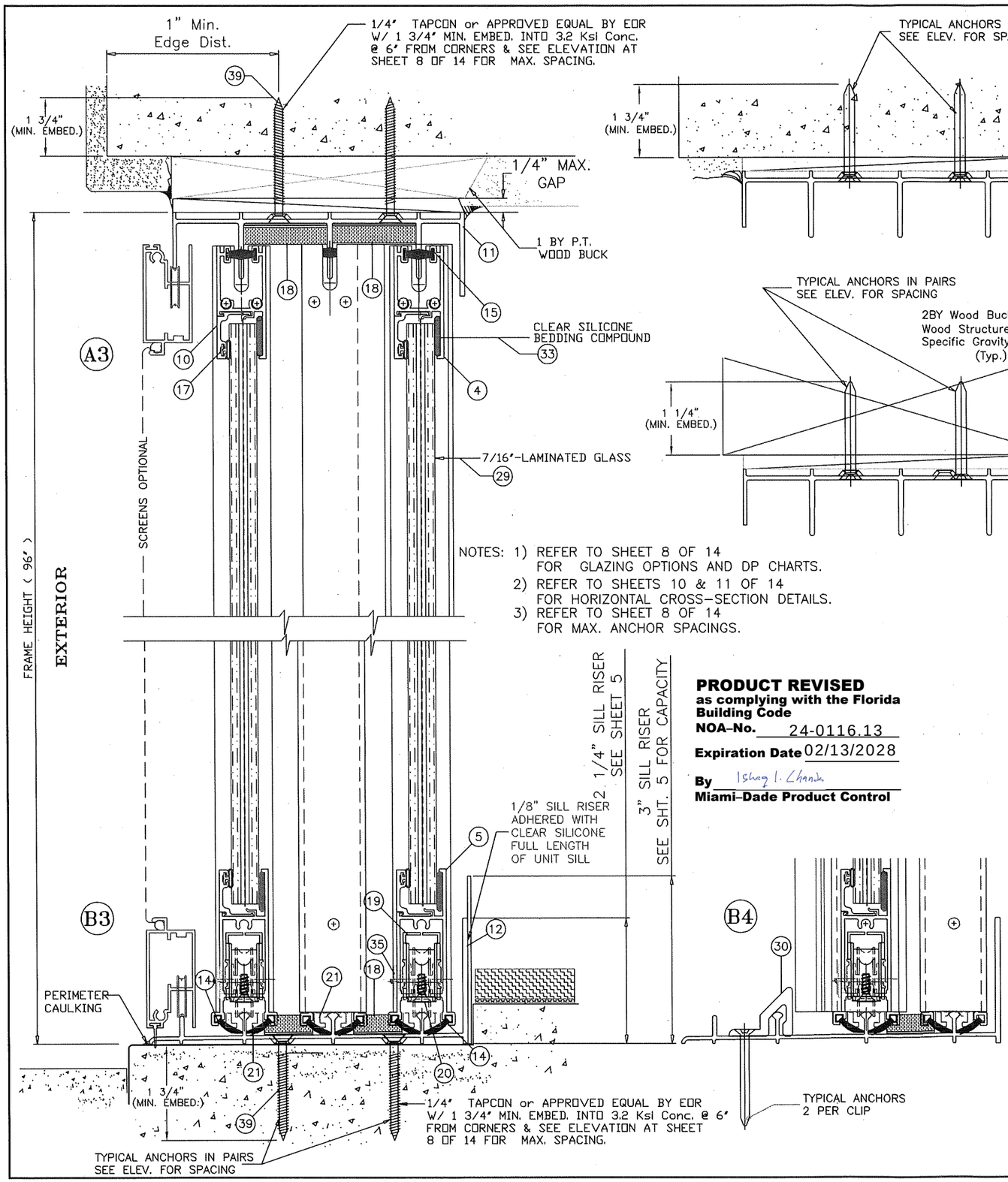

NOTES:
1) REFER TO SHEET 8 OF 14 FOR GLAZING OPTIONS AND DP CHARTS.
2) REFER TO SHEETS 10 & 11 OF 14 FOR HORIZONTAL CROSS-SECTION DETAILS.
3) REFER TO SHEET 8 OF 14 FOR MAX. ANCHOR SPACINGS.

PRODUCT REVISED
as complying with the Florida Building Code
NOA-No. 24-0116.13
Expiration Date 02/13/2028
By Ishaq I. Chanda
Miami-Dade Product Control

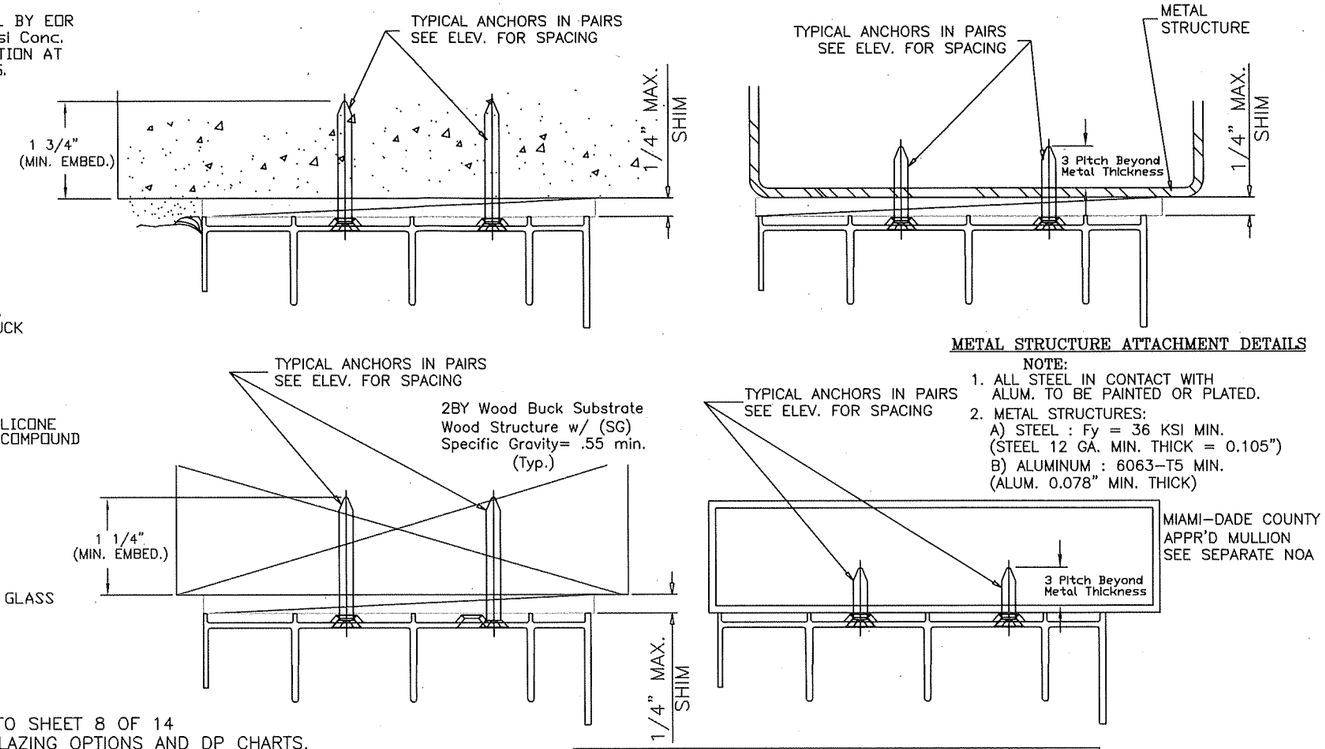

METAL STRUCTURE ATTACHMENT DETAILS

NOTE:
1. ALL STEEL IN CONTACT WITH ALUM. TO BE PAINTED OR PLATED.
2. METAL STRUCTURES:
A) STEEL : Fy = 36 KSI MIN. (STEEL 12 GA. MIN. THICK = 0.105")
B) ALUMINUM : 6063-T5 MIN. (ALUM. 0.078" MIN. THICK)

WOOD BUCKS AND METAL STRUCTURES NOT BY CWS MUST SUPPORT LOADS IMPOSED BY GLAZING SYSTEM AND TRANSFER THEM TO THE BUILDING STRUCTURE.

TYPICAL ANCHORS: SEE ELEV. AT SHEET 8 FOR SPACING

ANCHOR TYPE CHART IN CONC. or MASONRY (min.)					
ANCHOR OPTIONS	HEAD-SILL	JAMB	Embedment	Edge Dist.	Concrete
ELCO ULTRACON	1/4"	1/4"	1 3/4"	1"	2.85 Ksi
BUILDEX	1/4"	–	1 3/4"	4"	3.2 Ksi
BUILDEX	–	3/16"	1 3/4"	3"	3.2 Ksi

ANCHOR TYPE CHART IN 2X WOOD BUCK (min.)					
ANCHOR OPTIONS	HEAD-SILL	JAMB	Embedment	Edge Dist.	2x Wood
ELCO ULTRACON	1/4"	1/4"	1 1/4"	1"	.55 SG
BUILDEX	1/4"	1/4"	1 1/4"	1"	.55 SG
S.M.S. (Into 2X)	#12	#12	1 1/4"	1"	.55 SG

1/4" DRILLFLEX SELF DRILLING SCREWS
INTO METAL STRUCTURES
STEEL : 12 GA. MIN. (Fy = 36 KSI MIN.)
ALUMINUM : 1/8" THK. MIN. (6063-T5 MIN.)
(STEEL IN CONTACT WITH ALUMINUM TO BE PLATED OR PAINTED)
#10 SMS
INTO APPROVED MULLIONS (NO SHIM SPACE)
TYPICAL EDGE DISTANCE
(1/4") INTO CONCRETE AND MASONRY = 1" MIN. (ELCO ULTRACON)
(1/4") INTO CONCRETE AND MASONRY = 4" MIN. (ITW BUILDEX)
(3/16") INTO CONCRETE AND MASONRY = 3" MIN. (ITW BUILDEX)
INTO WOOD STRUCTURE = 1" MIN.
INTO METAL STRUCTURE = 3/4" MIN.

SEALANTS:
FRAME AND VENT CORNERS AND INSTALLATION SCREWS AT SILL SEALED WITH WHITE/ALUMINUM COLORED SEALANT.

CWS
1900 SW 44TH AVE.
OCALA, FLORIDA 34474
WWW.CWS.CC

7900 ALUMINUM SLIDING DOOR - IMPACT

NO.:	DESCRIPTION:	BY:	DATE:

REVISIONS

THOMAS J. SOTOS LICENSE No. 55225 STATE OF FLORIDA PROFESSIONAL ENGINEER

DATE DEC 18 2023

THOMAS J. SOTOS, P.E.
FL. P.E. LIC. # 55225

SHEET DESCRIPTION:
3 TRACK VERTICAL CROSS SECTIONS, DETAILS & ANCHOR NOTES

DRAWN BY:	DATE:
N. Erazo	12/18/2023
REV. BY: ---	DATE: ---
DWG #: CWS-1223	REV #:
SCALE: ---	SHEET 9 OF 14

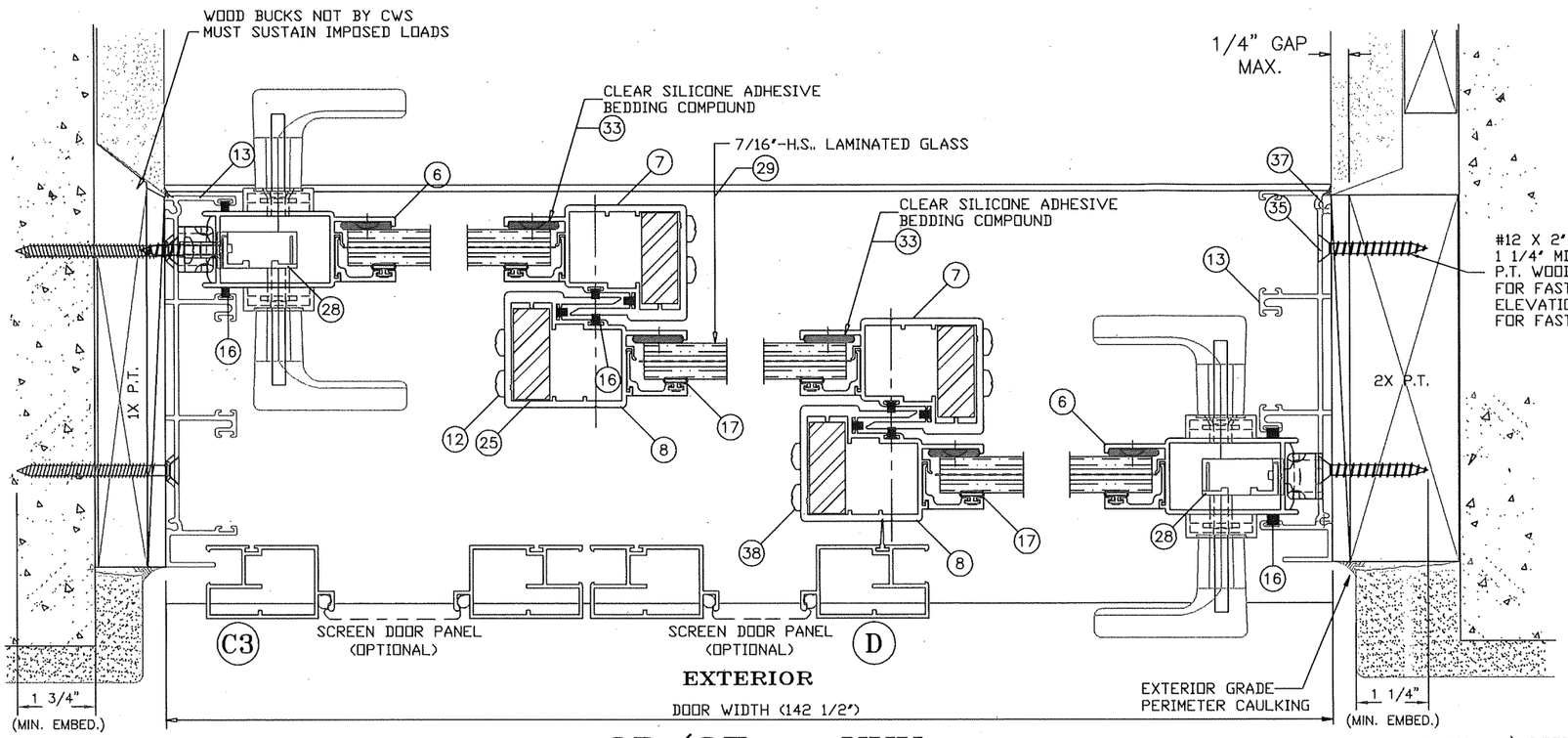

3D/3T – XXX

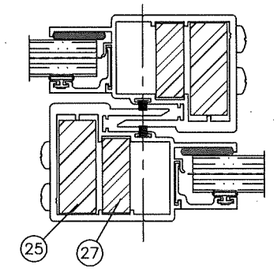

2 STEEL BARS REQD. ON SIZES AS LISTED IN DP CHART W/ PRESSURES SHOWN ON SHEET 8 OF 14

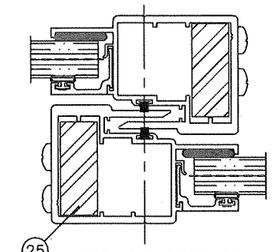

1 STEEL BAR REQD. ON SIZES AS LISTED IN DP CHART W/ PRESSURES SHOWN ON SHEET 8 OF 14

NOTES:
1) REFER TO SHEET 8 OF 14 FOR GLAZING OPTIONS AND DP CHARTS.
2) REFER TO SHEET 9 OF 14 FOR VERTICAL CROSS-SECTION DETAILS.
3) REFER TO SHEET 9 OF 14 FOR TYPICAL ANCHORS AND NOTES.
4) REFER TO SHEET 8 OF 14 FOR MAX. ANCHOR SPACINGS.

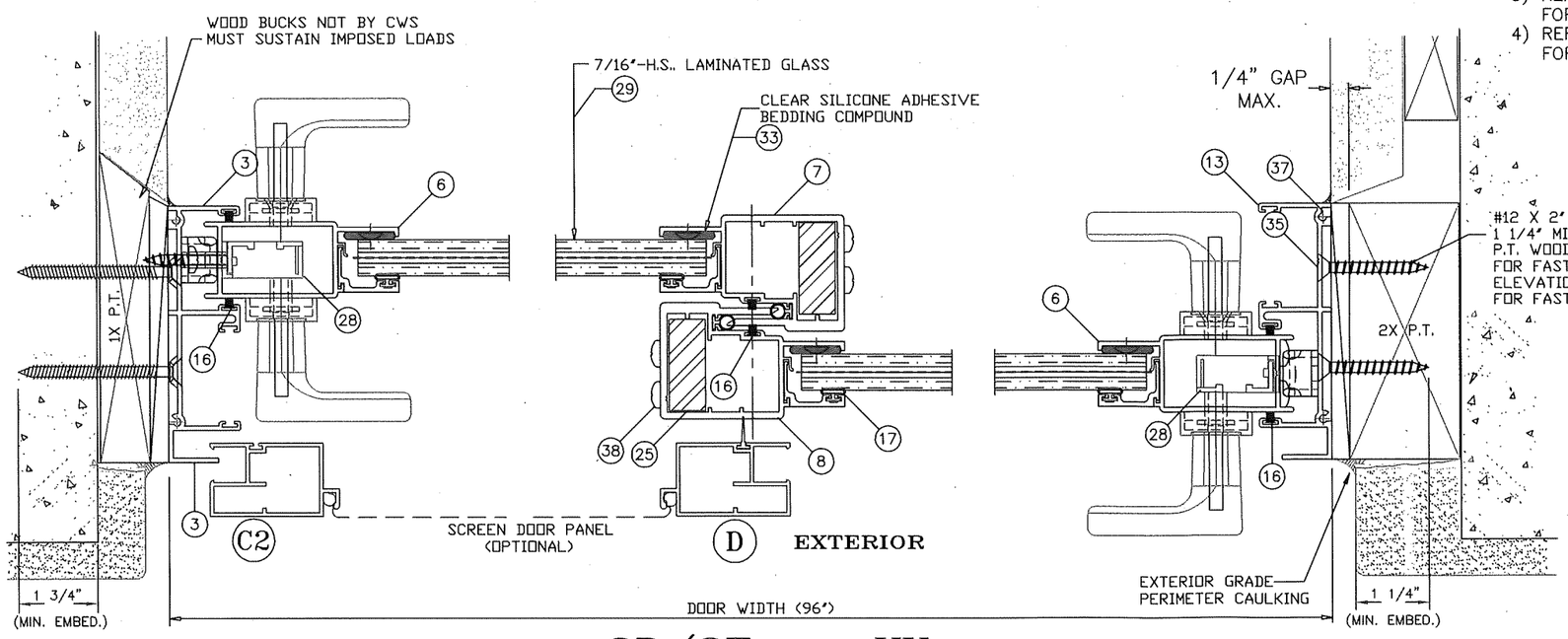

2D/2T – XX

PRODUCT REVISED
as complying with the Florida Building Code
NOA-No. 24-0116.13
Expiration Date 02/13/2028
By Ishaq I. Chanda
Miami-Dade Product Control

CWS
1900 SW 44TH AVE.
OCALA, FLORIDA 34474
WWW.CWS.CC

7900 ALUMINUM SLIDING DOOR - IMPACT

NO.:	DESCRIPTION:	BY:	DATE:

REVISIONS

THOMAS J. SOTOS LICENSE No 55225 STATE OF FLORIDA PROFESSIONAL ENGINEER

DATE DEC 18 2023

THOMAS J. SOTOS, P.E.
FL. P.E. LIC. # 55225

SHEET DESCRIPTION:
TWO DOOR & THREE DOOR HORIZONTAL CROSS SECTIONS, & NOTES

DRAWN BY:	DATE:
N. Erazo	12/18/2023
REV. BY: ---	DATE: ---
DWG #: CWS-1223	REV #:
SCALE: ---	SHEET 10 OF 14

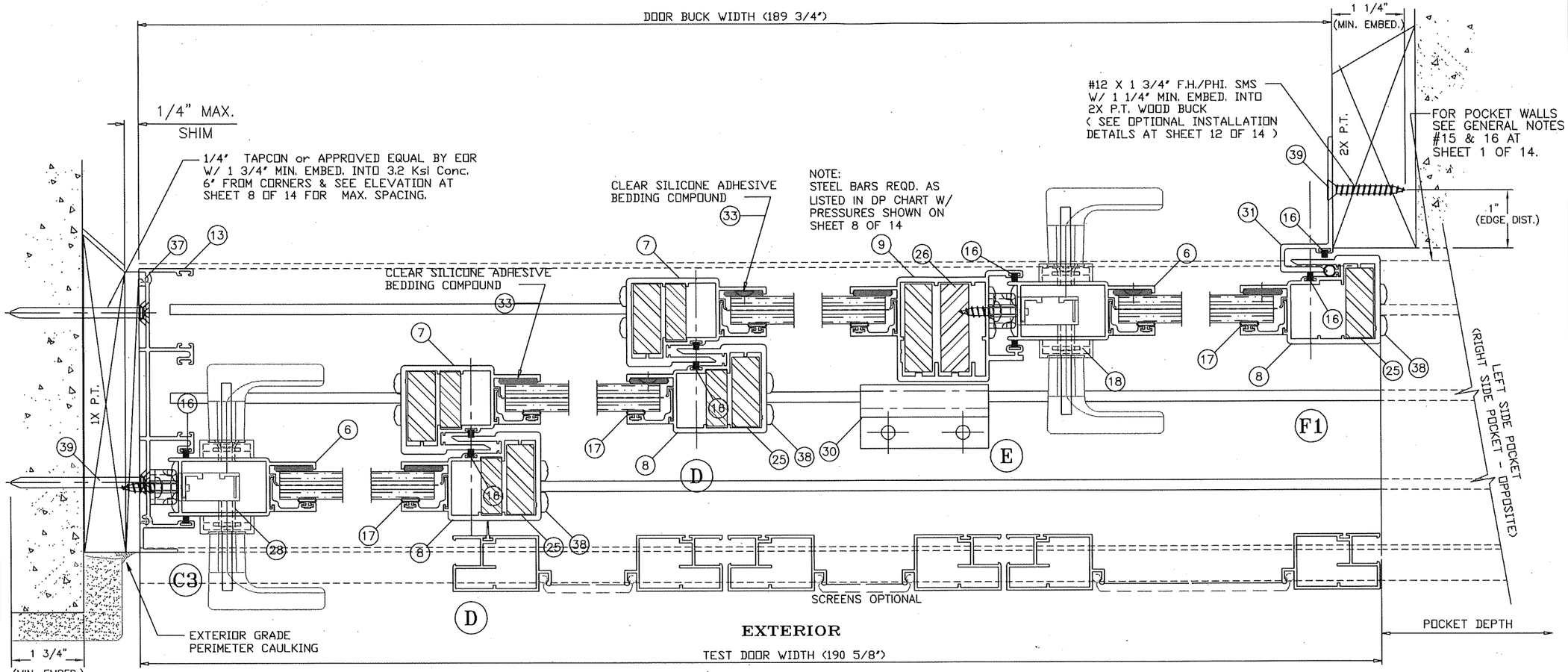

4D/3T – XXXXP

NOTES:
1) REFER TO SHEET 8 OF 14 FOR GLAZING OPTIONS AND DP CHARTS.
2) REFER TO SHEET 9 OF 14 FOR VERTICAL CROSS-SECTION DETAILS.
3) REFER TO SHEET 9 OF 14 FOR TYPICAL ANCHORS AND NOTES.
4) REFER TO SHEET 8 OF 14 FOR MAX. ANCHOR SPACINGS.

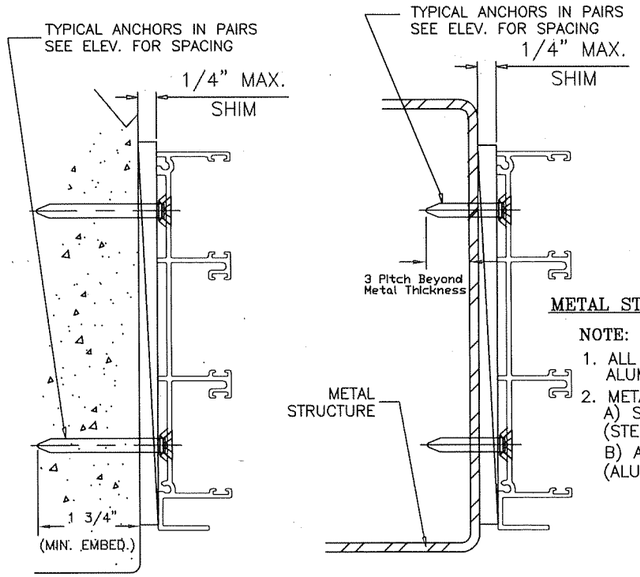

METAL STRUCTURE ATTACHMENT DETAIL

NOTE:
1. ALL STEEL IN CONTACT WITH ALUM. TO BE PAINTED OR PLATED.
2. METAL STRUCTURES:
   A) STEEL : Fy = 36 KSI MIN. (STEEL 12 GA. MIN. THICK – 0.105")
   B) ALUMINUM : 6063-T5 MIN. (ALUM. 0.078" MIN. THICK)

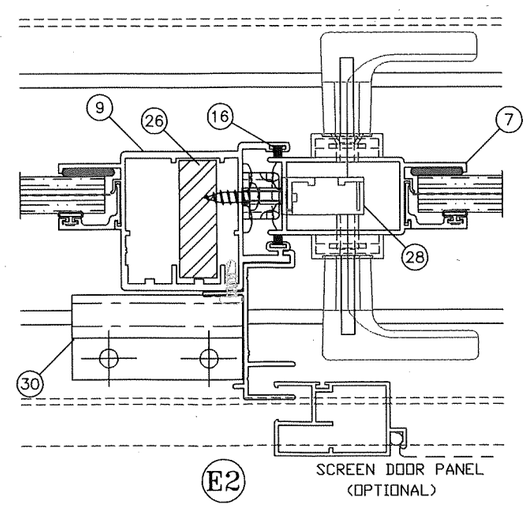

PRODUCT REVISED
as complying with the Florida Building Code
NOA-No. 24-0116.13
Expiration Date 02/13/2028
By Ishaq I. Chanda
Miami-Dade Product Control

CWS
1900 SW 44TH AVE.
OCALA, FLORIDA 34474
WWW.CWS.CC

7900 ALUMINUM SLIDING DOOR - IMPACT

NO.:	DESCRIPTION:	BY:	DATE:

REVISIONS

THOMAS J. SOTOS LICENSE No 55225 STATE OF FLORIDA PROFESSIONAL ENGINEER

DATE DEC 18 2023

THOMAS J. SOTOS, P.E.
FL. P.E. LIC. # 55225

SHEET DESCRIPTION:
FOUR DOOR HORIZONTAL CROSS SECTIONS, INSTALLATION DETAILS & NOTES

DRAWN BY:	DATE:
N. Erazo	12/18/2023
REV. BY: ---	DATE: ---
DWG #: CWS-1223	REV #:
SCALE: ---	SHEET 11 OF 14

BILL OF MATERIALS – 2 & 3 TRACK FRAME

ITEM #	PART #	QTY.	DESCRIPTION	REMARKS
1	L-9211	1	2 TRACK FRAME HEAD	6063-T6 ALUMINUM
1.2	L-9211	1	2 TRACK FRAME HEAD (Multi-Slide)	6063-T6 ALUMINUM
2	L-9206	1	2 TRACK FRAME SILL	6063-T5 ALUMINUM
3	L-9212	2	2 TRACK FRAME JAMB	6063-T5 ALUMINUM
4	L-9204	1 X PANEL	PANEL TOP RAIL	6063-T5 ALUMINUM
5	L-9205	1 X PANEL	PANEL BOTTOM RAIL	6063-T5 ALUMINUM
6	L-9201	1	PANEL LOCK STILE	6063-T6 ALUMINUM
7	L-9202	1	PANEL INTERIOR INTERLOCK	6063-T6 ALUMINUM
8	L-9203	1	PANEL EXTERIOR INTERLOCK	6063-T6 ALUMINUM
9	L-9207	1	PANEL ASTRAGAL	6063-T6 ALUMINUM
10	L-9209	AS REQ'D.	ALUMINUM GLAZING BEAD	6063-T5 ALUMINUM
11	L-9214	1	3 TRACK FRAME HEAD	6063-T6 ALUMINUM
12	L-9208	1	3 TRACK FRAME SILL	6063-T5 ALUMINUM
13	L-9213	2	3 TRACK FRAME JAMB	6063-T5 ALUMINUM
14	PWS-016	AS REQ'D.	BOTTOM RAIL WTS'P	ULTRAFAB #QB6757DK
15	PWS-009	AS REQ'D.	PANEL TOP RAIL WTS'P	.187'x.310' (7830-6001-1)
16	PWS-003	AS REQ'D.	FIN SEAL WEATHERSTRIP	.187'x.210' (7820-6001-9)
17	VWS-004	AS REQ'D.	BULB VINYL (FPVC)	1/4' O.D.
18	L-9016	2	SELF ADHESIVE PILE PAD	13/16' X 1 1/2'
19	HC-046	2	MVG. PANEL TANDEM ROLLER	2 X EA. MVG. BOT. RAIL
20	FS-003	2	ROLLER ATTACHMENT SCREW	#8 X 1/2' F.H./PHIL.
21	AR-008	2X PANEL	PANEL 'C' TRACK CLIP	6063-T6 ALUMINUM
22	FS-042	AS REQD.	'C' TRACK ATTACHMENT SCREW	#10 X 1' SMS F.H./PHIL.
23	L-9018	1 X ANCHOR	FIXED PANEL JAMB CLIP	6063-T5 ALUMINUM
24	FS-011	1 X CLIP	FIXED PANEL CLIP SCREW	#10 X 5/8' PH/PHIL.
25	AR-020	*	INTERLOCK STEEL REINFORCEMENT	1/2' X 1 1/4' (36 KSI)
26	AR-021	*	ASTRAGAL STEEL REINFORCEMENT	1/2' X 1 1/2' (36 KSI)
27	AR-024	*	INTERLOCK STEEL REINFORCEMENT	3/8' X 1' (36 KSI)
28	HC-047	1	MORTISE LOCK HARDWARE	W/ HANDLES & KEEPER
29	*	1 x Panel	7/16' Laminated H.S. Glass	See Glazing Details
30	L-9022	*	ASTRAGAL PANEL SILL CLIP	6063-T5 ALUMINUM
31	L-9215	1	POCKET JAMB HOOK	6063-T6 ALUMINUM
32	SM-5731	*	NEUTRAL CURE SILICONE	Schnee-Morehead 5731
33	DC-899	AS REQ'D.	NEUTRAL CURE SILICONE	Dow Corning 899
34	*	*	NEUTRAL CURE SILICONE	Tremco Spectrem 2
35	HC-045	2	NYLON PLUG (.480' HOLE)	RIGID PVC
36	HC-043	2X PANEL	NYLON TOP GUIDE	RIGID PVC
37	FS-005	AS REQ'D.	FRAME ASSEMBLY SCREWS	#8 X 1/2' P.H. PHILLIPS
38	FS-013	AS REQ'D.	PANEL ASSEMBLY SCREWS	#10 X 1' P.H. PHILLIPS
39	FS-014	AS REQD.	INSTALLATION SCREWS	#12 X 1 3/4' F.H./PHIL.
40	PL 75.6020	AS REQ'D.	GLAZING SETTING BLOCK	SOFT PVC 1/8' x 1/8' x 2'L.
41	*	–	SCREEN PANEL	*
42	SM-5504	AS REQ'D.	JOINT SEALANT	Schnee-Morehead 5504
43	*	*	PERIMETER CAULKING	OSI POLYSEAMSEAL
44	*	1	PRODUCT LABEL	*

NOTE:
1. FOR ANCHOR TYPES SEE NOTES AT SHEETS 3, 6, & 9.
2. FOR POCKET WALLS SEE GENERAL NOTES #15 & 16 AT SHEET 1 OF 14.

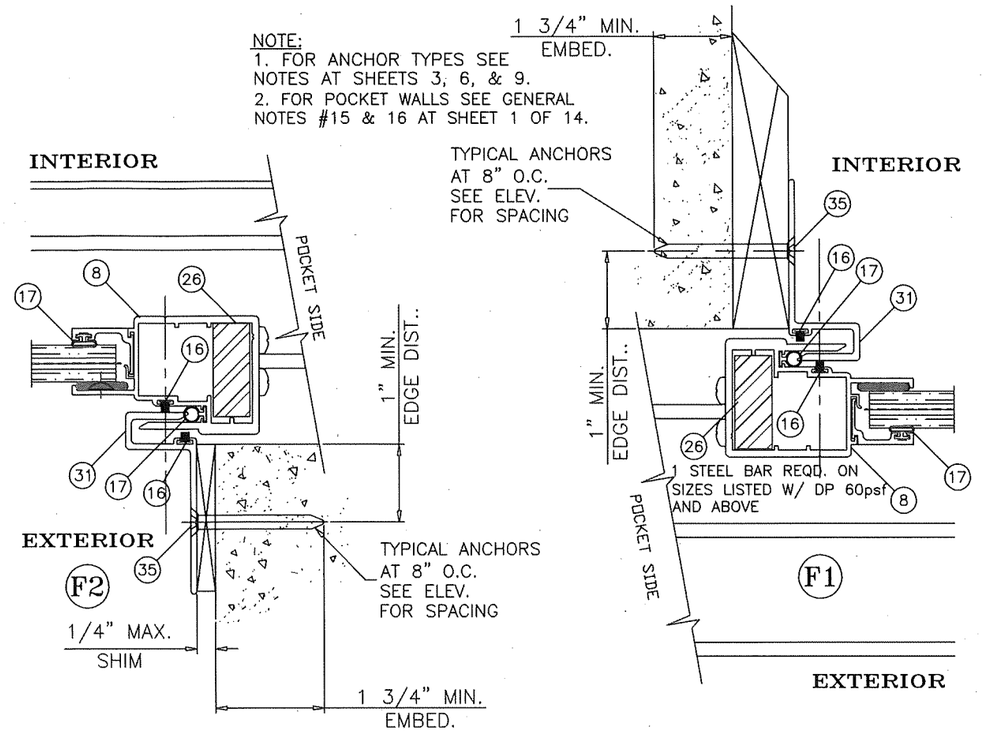

POCKET DOOR HOOK ATTACHMENT DETAILS

Flexible Vinyl (FPVC) Composition - Team Plastics, Inc.

***1. FPVC Black: Compound No. 7200-75**

PHYSICAL		ASTM NO.
Durometer Hardness "A", 10 sec	75	D-2240
Specific Gravity	1.45	D-792
Tensile Strength, PSI	1640	D-638
Ultimate Elongation, %	340.0	D-638
Modulus @ 100% Elongation, PSI	765.0	D-638
Impact Brittleness,	-31.0	D-746

***2. FPVC White: Compound No. 7267-75**

PHYSICAL		ASTM NO.
Durometer Hardness "A", 10 sec	75	D-2240
Specific Gravity	1.45	D-792
Tensile Strength, PSI	1640	D-638
Ultimate Elongation, %	325.0	D-638
Modulus @ 100% Elongation, PSI	765.0	D-638
Impact Brittleness,	-30.0	D-746

PRODUCT REVISED
as complying with the Florida Building Code
NOA-No. 24-0116.13
Expiration Date 02/13/2028
By Ishwar I. Chandra
Miami-Dade Product Control

CWS
1900 SW 44TH AVE.
OCALA, FLORIDA 34474
WWW.CWS.CC

7900 ALUMINUM SLIDING DOOR - IMPACT

NO.:	DESCRIPTION:	BY:	DATE:

REVISIONS

THOMAS J. SOTOS LICENSE No. 55225 STATE OF FLORIDA PROFESSIONAL ENGINEER

DATE DEC. 18 2023

THOMAS J. SOTOS, P.E.
FL. P.E. LIC. # 55225

SHEET DESCRIPTION:
BILL OF MATERIALS, POCKET JAMB HOOK ATTACHMENT DETAILS

DRAWN BY:	DATE:
N. Erazo	12/18/2023
REV. BY: ---	DATE: ---
DWG #: CWS-1223	REV #:
SCALE: ---	SHEET 12 OF 14

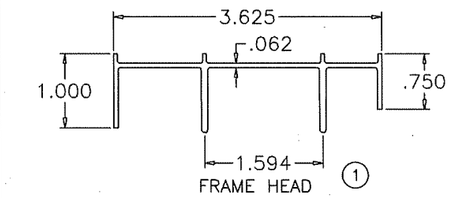

FRAME HEAD (1)

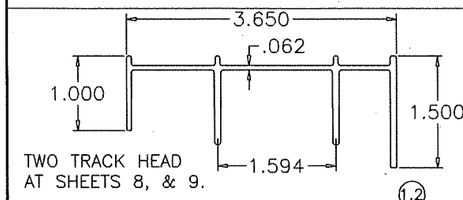

TWO TRACK HEAD
AT SHEETS 8, & 9.

MULTI-SLIDE FRAME HEAD (1.2)

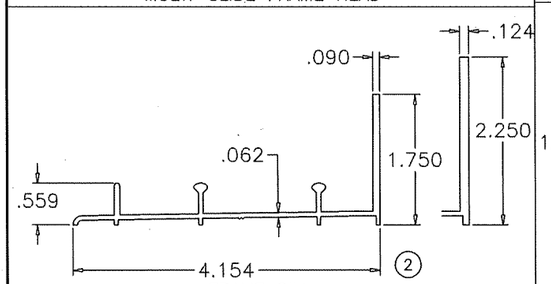

FRAME SILL (2)

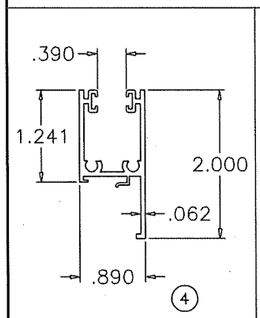

PANEL TOP RAIL (4)

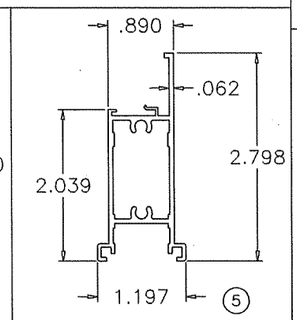

PANEL BOTTOM RAIL (5)

GLASS STOP (10)

LOCK STILE (6)

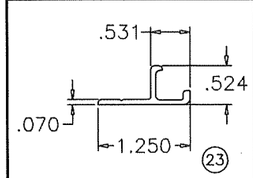

FIXED PANEL CLIP (23)

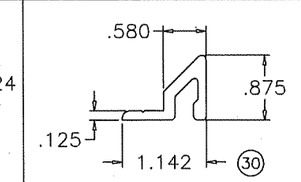

ASTRAGAL RETAINER (30)

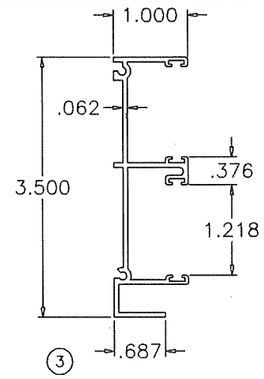

FRAME JAMB (3)

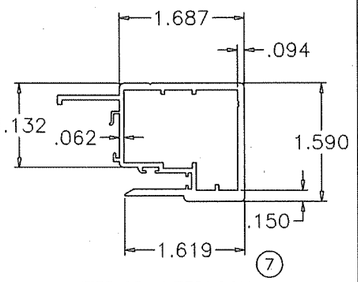

INTERIOR INTERLOCK (7)

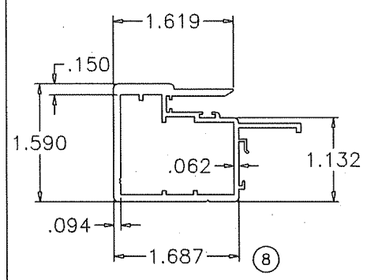

EXTERIOR INTERLOCK (8)

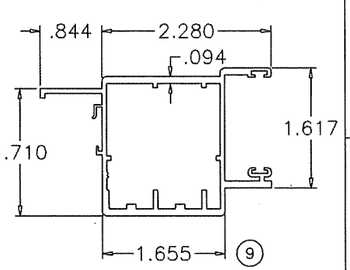

ASTRAGAL STILE (9)

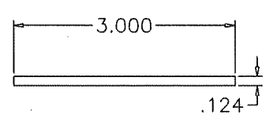

SILL RISER

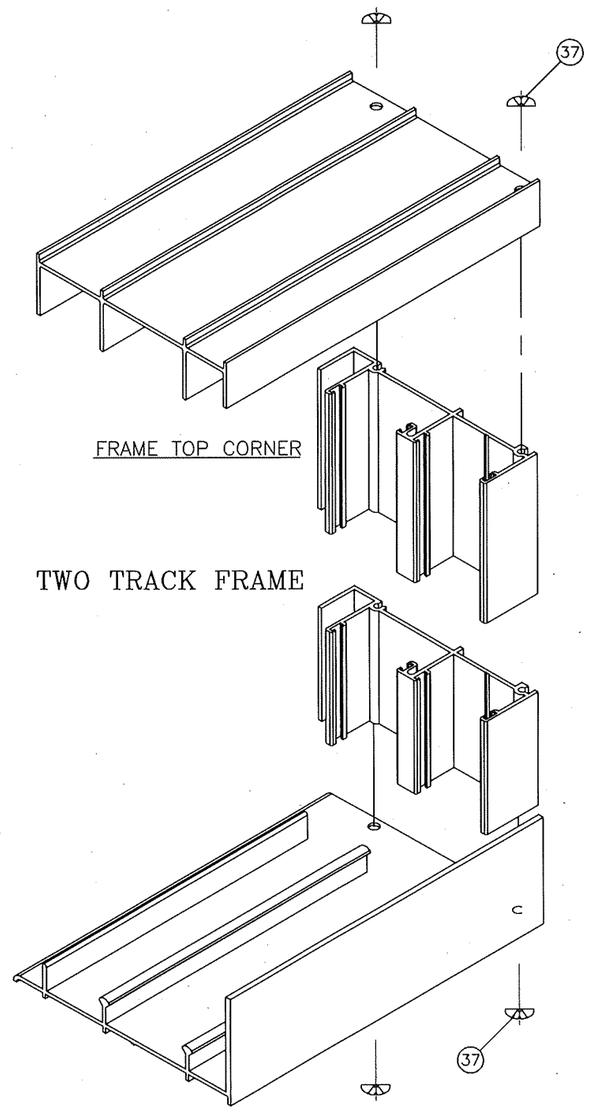

FRAME TOP CORNER

TWO TRACK FRAME

FRAME BOTTOM CORNER

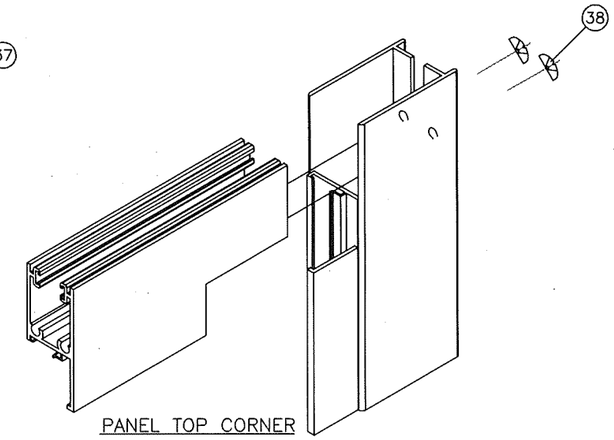

PANEL TOP CORNER

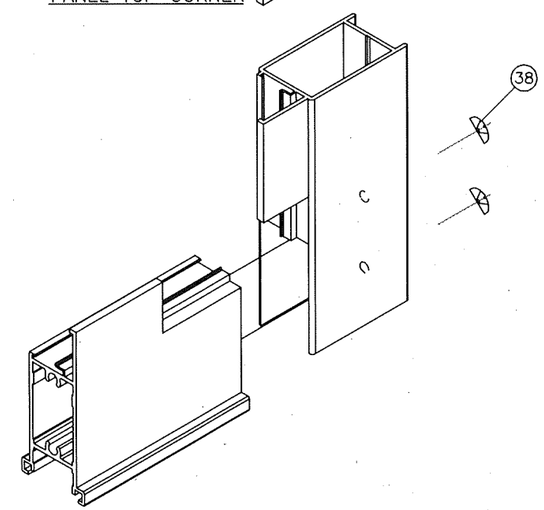

PANEL BOTTOM CORNER

PRODUCT REVISED
as complying with the Florida Building Code
NOA-No. 24-0116.13
Expiration Date 02/13/2028
By Ishaq I. Chanda
Miami-Dade Product Control

CWS
1900 SW 44TH AVE.
OCALA, FLORIDA 34474
WWW.CWS.CC

7900 ALUMINUM SLIDING DOOR - IMPACT

NO.:	DESCRIPTION:	BY:	DATE:

REVISIONS

THOMAS J. SOTOS LICENSE No. 55225 STATE OF FLORIDA PROFESSIONAL ENGINEER

DATE DEC 18 2023

THOMAS J. SOTOS, P.E.
FL. P.E. LIC. # 55225

SHEET DESCRIPTION:
EXTRUSION DETAILS & FRAME AND PANEL CORNER ASSEMBLY DETAILS

DRAWN BY:	DATE:
N. Erazo	12/18/2023
REV. BY: ---	DATE: ---
DWG #: CWS-1223	REV #:
SCALE: ---	SHEET 13 OF 14

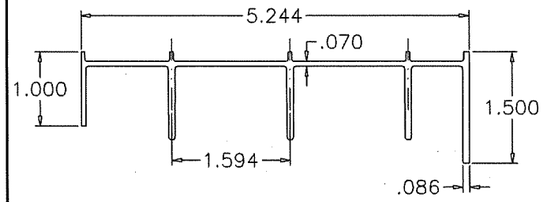

FRAME HEAD (11)

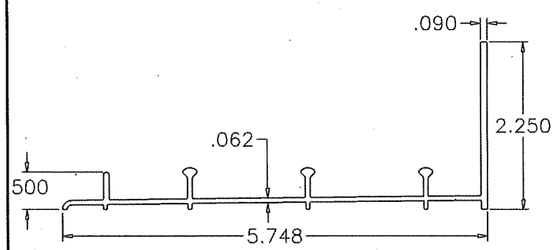

FRAME SILL (12)

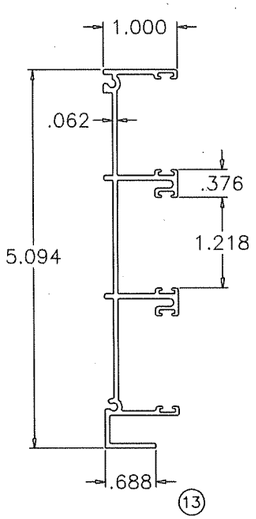

FRAME JAMB (13)

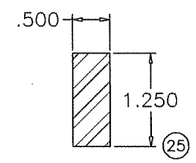

INTERLOCK REINFORCING (25)

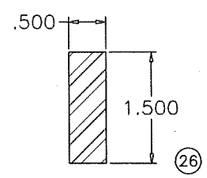

ASTRAGAL REINFORCING (26)

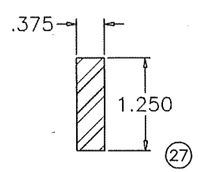

INTERLOCK REINFORCING (27)

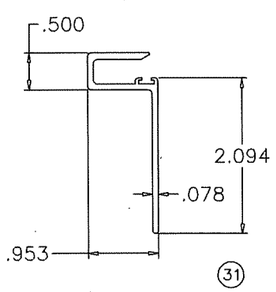

Pocket "P" Hook (31)

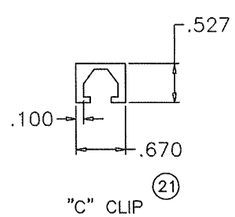

"C" CLIP (21)

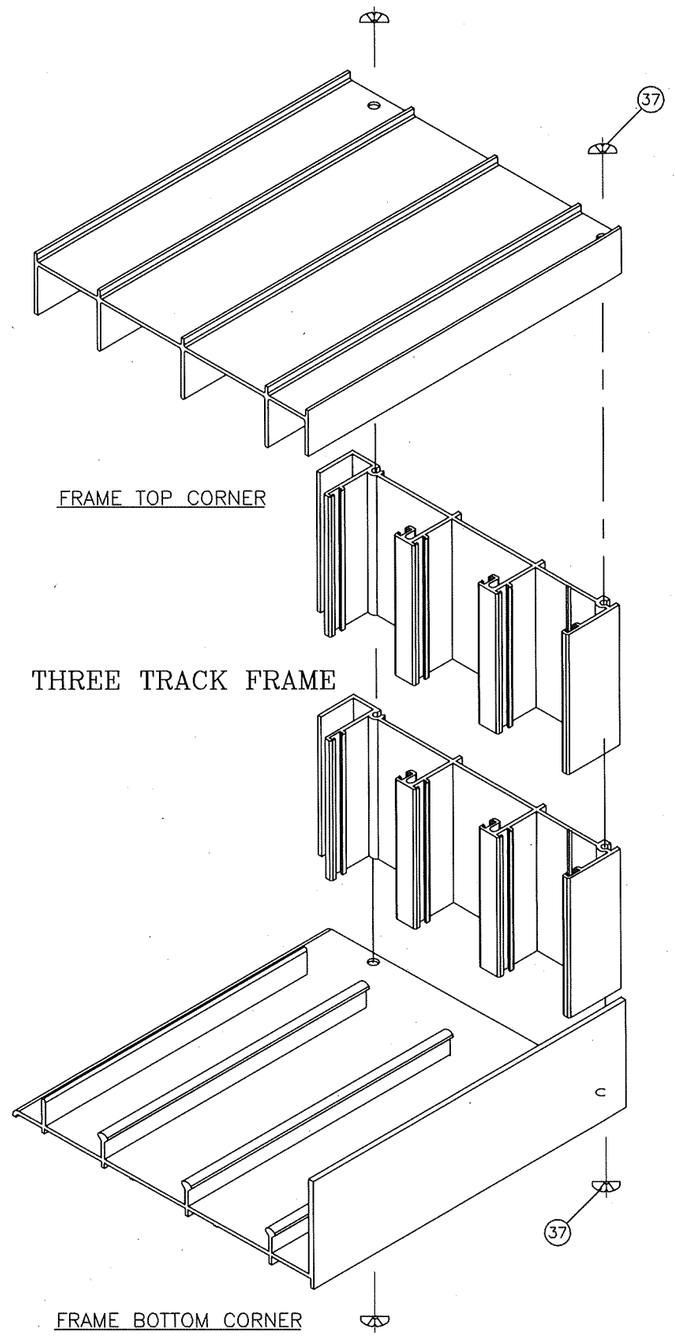

PRODUCT REVISED
as complying with the Florida Building Code
NOA-No. 24-0116.13
Expiration Date 02/13/2028
By Ishaq I. Chanda
Miami-Dade Product Control

CWS
1900 SW 44TH AVE.
OCALA, FLORIDA 34474
WWW.CWS.CC

7900 ALUMINUM SLIDING DOOR - IMPACT

NO.:	DESCRIPTION:	BY:	DATE:

REVISIONS

THOMAS J. SOTOS LICENSE No 55225 STATE OF FLORIDA PROFESSIONAL ENGINEER

DEC 18 2023

DATE_____

THOMAS J. SOTOS, P.E.
FL. P.E. LIC. # 55225

SHEET DESCRIPTION:
EXTRUSION DETAILS, REIFORCEMENTS, & FRAME CORNER ASSEMBLY DETAILS

DRAWN BY:	DATE:
N. Erazo	12/18/2023
REV. BY:	DATE:
---	---
DWG #:	REV #:
CWS-1223	
SCALE:	SHEET
---	14 OF 14